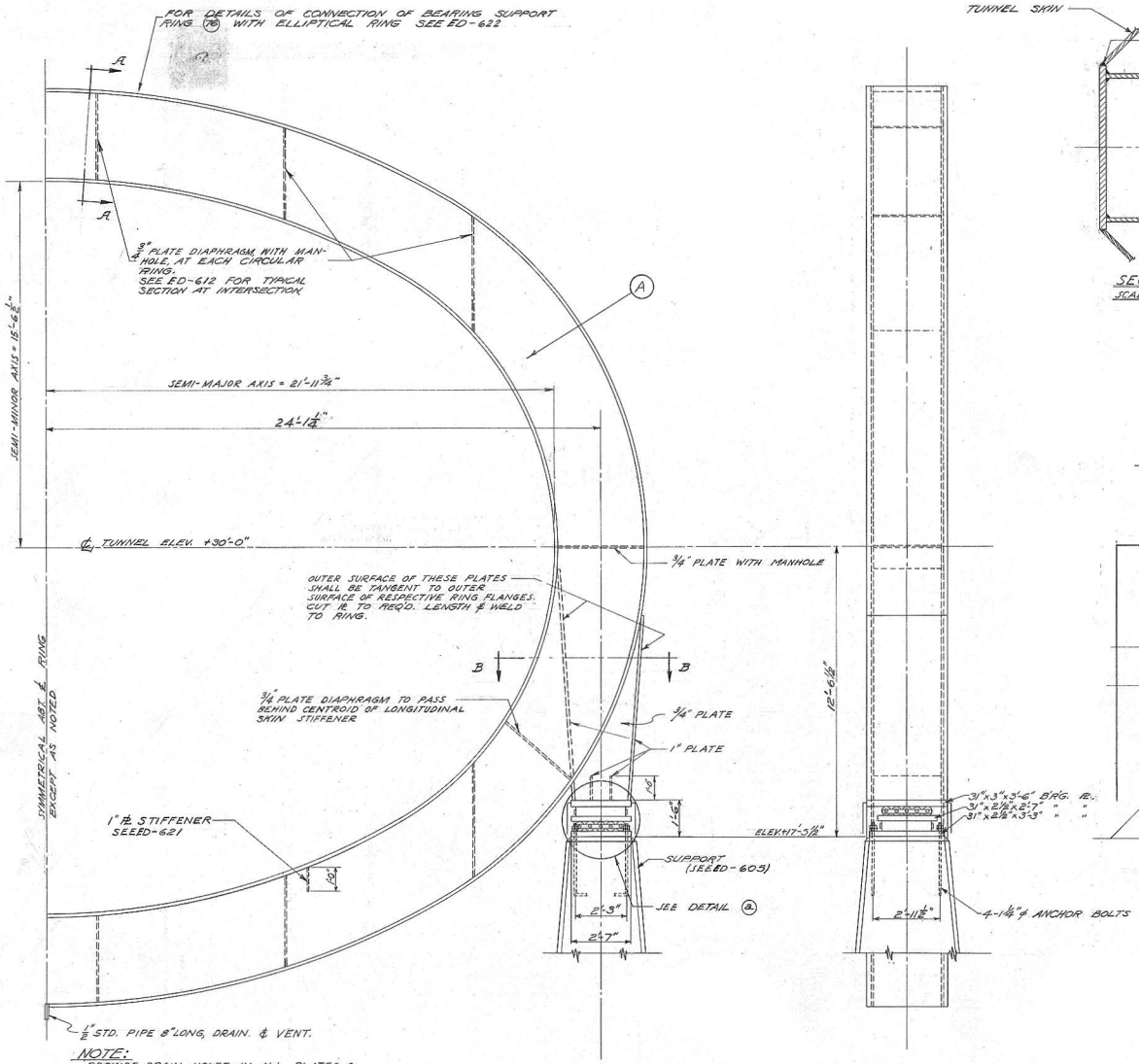

NOTE:
PROVIDE DRAIN HOLES IN ALL PLATES & DIAPHRAGMS INSIDE RING

DETAIL OF ELLIPTICAL RING (b)
SCALE 3/8" = 1'-0"

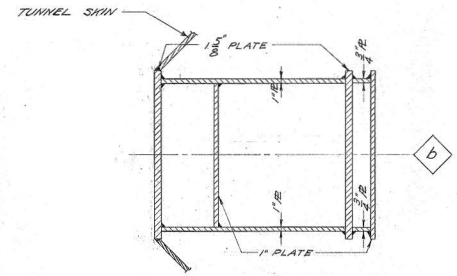

SECTION "B-B"
SCALE 3/4" = 1'-0"

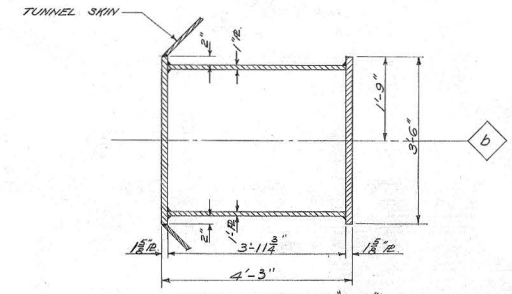

TYPICAL SECTION "A-A"
SCALE 3/4" = 1'-0"

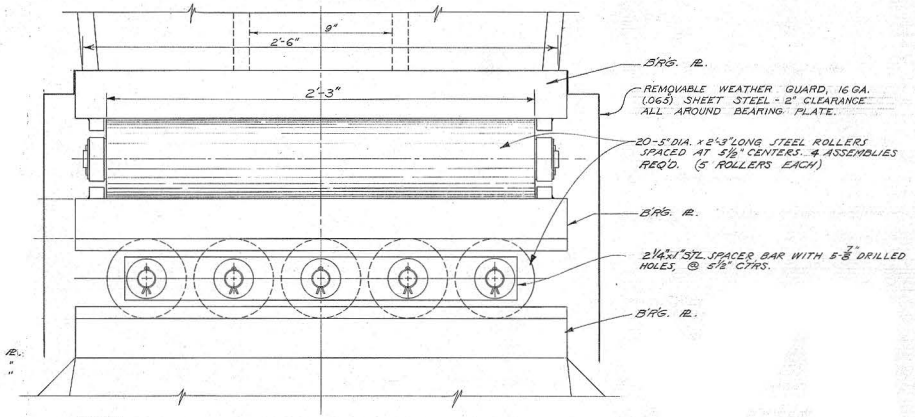

NOTE:
SEE ED-619 DETAIL (a) FOR GENERAL NOTES.

DETAIL (a)
SCALE 9" = 1'-0"

B		ED613 WAS D613 12-28-44	ALH.
A	4/27/42	STIFFENER PLS FOR LONG. SKIN STIFFENERS REMOVED.	MCM.

REVISIONS

ENG. RES. LAB. WIND TUNNEL RING (b)
CLEVELAND, OHIO

NATIONAL ADVISORY COMMITTEE FOR AERONAUTICS
AMES AERONAUTICAL LABORATORY
MOFFETT FIELD, CALIFORNIA

DR. R.M.H.	8/6/41	ED613
CH. MASSA	11-28-41	
APP. RB	11-29-41	
APP. C.J.H.	12-28-41	

SCALE AS NOTED

D-613