Alex Schwartz

337.1

file

REPORT OF SPECIAL PANEL

PRELIMINARY PROPOSAL FOR A
PROPULSION SCIENCES LABORATORY

at the

Flight Propulsion Research Laboratory
Cleveland, Ohio

NACA - Cleveland

Cleveland, Ohio
March 18, 1948

MEMORANDUM For Director.

Subject: Report of the Special Panel appointed to study general requirements of the Propulsion Sciences Laboratory.

1. There is transmitted herewith the revised report of the Special Panel appointed November 3, 1947 to study the requirements for the proposed Propulsion Sciences Laboratory. The report outlines the general specifications to be fulfilled by the laboratory when completed and presents detail specifications covering the Phase I ($10,000,000) construction program.

2. The Panel stresses the need for research facilities having a high use factor, if rapid progress is going to be made in carrying out fundamental research programs on propulsion systems for aircraft and guided missiles. It is this fundamental research that serves as the basis for all future aircraft development.

Carlton Kemper
Carlton Kemper
Executive Engineer.

CK:mes

REPORT OF THE SPECIAL PANEL ON THE PROPULSION SCIENCES

LABORATORY - FLIGHT PROPULSION RESEARCH

LABORATORY, CLEVELAND, OHIO

1. From a review of information now available on present propulsion systems for aircraft and guided missiles, the Panel has endeavored to forecast the future requirements in research facilities for obtaining fundamental research information on these propulsion systems. The facilities have been selected with the object of obtaining, and having available when required by the designer, the necessary fundamental information on compressors, combustors, turbines, controls, and supersonic ram jets for present and future designers of propulsion systems.

2. The Panel has endeavored to foresee and predict what the future requirements of research facilities will be. It is realized that planning for the future is absolutely necessary if basic research information is to be available when required by the designers of future propulsion systems. The methods of execution for these plans must be practicable and result in a research facility that works. The principal requirements of such a unique research facility are that it must be capable of being expanded, that it must be located close to a source of electric power unrestricted in quantity and low in cost, and that it must be capable of being operated 24 hours per day, 7 days a week. It is only by fulfilling these requirements that rapid progress can be made in carrying out the necessary fundamental research programs. The specification of 24 hours availability of the research facilities has already been built into three of the industrial development laboratories for jet engines. If this requirement has been found to be necessary for development work, how much more necessary it is that the research facility supplying the fundamental information on which the development is based should be available on a 24-hour-per-day basis!

3. The Congress has been requested to make available $10,000,000 for the completion of a Propulsion Sciences Laboratory. The Panel has selected research facilities which will contribute to the immediate solution of propulsion research problems. The Laboratory, if assigned to the Flight Propulsion Research Laboratory, will be located at the southwest section of the plot adjacent to SubStation A. The proposed location is shown on SKS 604-4.

4. The laboratory will supply combustion air and have exhaust capacity of the following quantities and pressures:

(a) 225 pounds per second of air at 55 pounds per square inch absolute pressure.

(b) 100 pounds per second of exhaust at a pressure equivalent to 50,000 feet altitude.

The total installed power requirement for the laboratory is approximately 88,000 KW.

5. The air supply system will permit fundamental information to be obtained on the performance of jet engines, turbo-propeller engines, and supersonic ram jets under altitude conditions from sea level to 50,000 feet altitude. Figure 2 shows the range of altitudes and Mach numbers at which the proposed air supply system will permit the investigation of the performance of turbojet engines giving 5,000, 10,000, and 15,000 pounds of sea-level static thrust. Jet engines of 15,000 pounds static thrust are already scheduled to be available for the military services within the next 5 years.

6. The laboratory will provide for research, two altitude chambers 20 feet in diameter and 230 feet in over-all length located at right angles to the combustion air and exhaust gas headers. This arrangement will permit the future expansion of the laboratory with no interference to equipment already installed. The proposed layout of facilities is shown in SKS 604-4. The general arrangement of the proposed altitude chambers is shown in Figure 1. The proposed air supply system will also be used in a research facility that will permit the determination of factors affecting the performance of the propeller, turbine, and controls of turbo-propeller engines. This research facility will be unique and will yield research information not at present attainable in any known research laboratory.

SUMMARY OF COSTS

7. A summary of the costs of Phase I of the Propulsion Sciences Laboratory is as follows:

AIR SYSTEM	$ 1,113,000
EXHAUST SYSTEM	2,408,000
POWER SUPPLY	1,756,000
PROCESS WATER SYSTEM	760,000
RESEARCH EQUIPMENT	1,312,000
BUILDING, UTILITY, ROAD, ETC.	2,366,000
CONTROL ROOM	285,000
TOTAL.....	$10,000,000

The estimated costs are based on economic conditions existing in 1947 and may be increased by an estimated 25 percent in 1948.

8. A detailed explanation of each of these items is given in Appendix A of this report prepared by the Technical Service Divisions.

9. At the request of the Panel, a comparison has been made by the Service Divisions to determine whether steam turbines or electric motors should be used as the driving units for the compressors and exhausters. The comparison showed definite advantages for the electric motor drive.

10. The number of research facilities now located at the Flight Propulsion Research Laboratory and those planned for the future will greatly increase the electrical load at the laboratory. An analysis of present and future requirements of electrical power at the laboratory has been prepared by Mr. Allan Heidenreich. A summary of the report is included as Appendix B. The report shows that to fulfill the requirement of a high use factor for the Propulsion Sciences Laboratory consideration should be given to locating the laboratory close to a source of cheap power that will be available 24 hours per day.

RECOMMENDATIONS

11. The Panel recommends that a definite decision be made as to the location of the Propulsion Sciences Laboratory to fulfill the requirement of a high use factor; that the design of the Propulsion Sciences Laboratory, be contracted for with an outside organization; and that the Propulsion Sciences Laboratory be completed by June 1950.

Carlton Kemper
Carlton Kemper, Chairman

Oscar W. Schey
Oscar W. Schey

Benjamin Pinkel
Benjamin Pinkel

Abe Silverstein
Abe Silverstein

John H. Collins, Jr.
John H. Collins, Jr.

C. S. Moore
C. S. Moore

CK:mes

NACA - Cleveland

Cleveland, Ohio,
March 26, 1948.

MEMORANDUM for Carlton Kemper, Chairman of Special Panel.

Subject: Revised Preliminary Proposal for Propulsion Sciences Laboratory of the Flight Propulsion Research Laboratory.

Reference: Memorandum for Carlton Kemper, Chairman, Special Panel to study general requirements for the proposed Propulsion Sciences Laboratory, February 12, 1948, ERS:imk:mcs.

1. Attached is the subject preliminary proposal revised in accordance with the reference memorandum.

2. This preliminary proposal is entended to serve as a basis for the future study and clarification as to requirements and best means of fulfilling them.

3. Attention is called to the recommended plan of procedure and the time schedule.

4. An organization chart is also included with Appendix A with sufficient room under the headings to add the names of person or persons designated to take charge of the various construction phases. Although the names do not appear on this chart, personnel has been selected and these names will be available for discussion.

C S Moore,

C. S. Moore,
Assistant Chief Service Engineer.

RP:mb
CSM

Enc.

APPENDIX A

PROPOSAL FOR PROPULSION SCIENCES LABORATORY

FPRL - CLEVELAND, OHIO

PHASE I

Description, Itemization, and Cost Estimates

General Description:

The purpose of the proposed project is to provide facilities for testing full-scale aircraft engines, such as turbojet or turbine-propeller and ram-jet engines, under simulated altitude operating conditions. The principal facilities furnished shall be a compressed-air system for combustion-air supply, an altitude-exhaust gas system, and research-equipment installations for engine testing. The project includes electric power supply connections, a process water system, buildings for housing equipment and personnel, access roads, equipment controls, intercommunications, and fire and accident protection.

The proposed immediate installations (Phase I) will provide an air supply system to furnish combustion air at the rate of 225 pounds per second at a pressure of 55 pounds per square inch absolute; it will provide an altitude-exhaust system to evacuate exhaust gases at the rate of 100 pounds per second (in addition to fuel) at altitude conditions of 50,000 feet; and it will provide a process water system sufficiently large to furnish water for exhaust-gas coolers, compressor aftercoolers, and other heat exchangers.

These installed capacities, however, are regarded as the first increment of installations to be made. It is proposed to increase these

capacities by additional construction from subsequent appropriations. The initial capacities are sufficient in themselves to permit testing complete aircraft power plants over a wide range of operating conditions. The ultimate capacities planned are for a combustion-air supply of 625 pounds per second at a pressure of 55 pounds per square inch absolute and of 400 pounds per second at a pressure of 165 pounds per square inch absolute; a refrigerated-air supply of 145 pounds per second at a temperature of -20° F, 75 pounds per second at -70° F, and 60 pounds per second at -100° F; and an altitude-exhaust system to evacuate exhaust gases at the rate of 55 pounds per second to simulate an altitude of 80,000 feet.

Adaptation of the J-33 Compressor Rotor for Compressing Air and Evacuating Exhaust Gases:

For the most economical installation, it is proposed to adapt the compressors of the J-33 jet propulsion engine for the compression of air in the combustion-air system and for the evacuation of exhaust gases in the altitude-exhaust system. Preliminary estimates indicate that the saving realized by the use of the J-33 compressor, over that of the conventional equipment, is approximately $2,000,000 for the proposed immediate installation (i.e. Phase I). The saving in the use of these compressor rotors occurs in the initial cost of the rotor, in the smaller machine units, as compared to the larger and slower commercial compressor units, in the smaller sized building necessary to house the compressors, and in the smaller foundation required. Coupled to these advantages is the higher performance efficiency of the J-33 compressor impeller, which results in lower power requirements to handle the same volume of

air or exhaust gases. Less electric motor starting torque will be required which is of importance in motor cost.

Mr. E. E. Stoeckley of General Electric Company states that he knows of no reason why compressors of the J-33 type cannot be used for the above-stated purpose for an indefinite period of time. He states that his company used J-33 type compressor wheels for compressing air in an installation with an expansion refrigerating turbine as long as 4 years before any inspection was made. The Allison Division gives similar reports based on experience with compressor wheels that have been used for duration tests with service equipment.

In order to adapt the J-33 compressor wheel, which will be driven by a conventional motor through speed stepup gears, for compressing air or evacuating exhaust gases, these compressor wheels may be furnished with redesigned scroll end bells, plenum chamber, shaft bearings, seals and base. However, it may be possible to use the conventional J-33 compressor casings and bearings. Detail analysis and design will determine the proper procedure. It is known that several companies are building or planning to build commercial air compressing equipment that use high-speed aircraft-rotor technique.

It is pointed out that even if conventional commercial machines were used for the proposed laboratory, machines of the required size have never been made before and the delivery date would be indefinite.

Compressed-Air System:

The component parts of the combustion-air system are the compressors, aftercoolers, piping, valves, pressure controls, and reheaters.

The capacity of the initial installation shall be 225 pounds of air per second compressed to 55 pounds per square inch absolute. Piping and valves will be designed for a capacity of 625 pounds per second, transmission pressures depending upon analysis of required flow conditions and pipe sizes.

For the initial installation there shall be three J-33 converted compressors, each consisting of a single, double-inlet rotor, and each delivering approximately 80 pounds of air per second at an inlet air temperature of 70° F, or a total of about 240 pounds of air per second at a pressure of 55 pounds per square inch absolute. Each compressor unit shall be driven by a 10,000-horsepower motor through speed stepup gears; this will handle air at an inlet temperature of 0° F at 6 percent overload. The normal speed of these impellers for delivering 80 pounds of air per second at a compression ratio of 3.75 is approximately 11,500 rpm. Load control for the compressors shall be by varying the number of compressors in service and by bleeding off excess air.

Pressure regulation at the test stand to supply the combustion air at the required inlet pressures to the engine will be obtained by pressure regulating valves and special controls which will provide inlet pressures varying from 55 pounds per square inch absolute (the pressure delivered by the compressor) down to 3 inches of mercury absolute or lower.

The aftercoolers shall be of the standard design shell and tube type capable of cooling the compressed air to an approximate maximum temperature of 90° F with cooling-tower water.

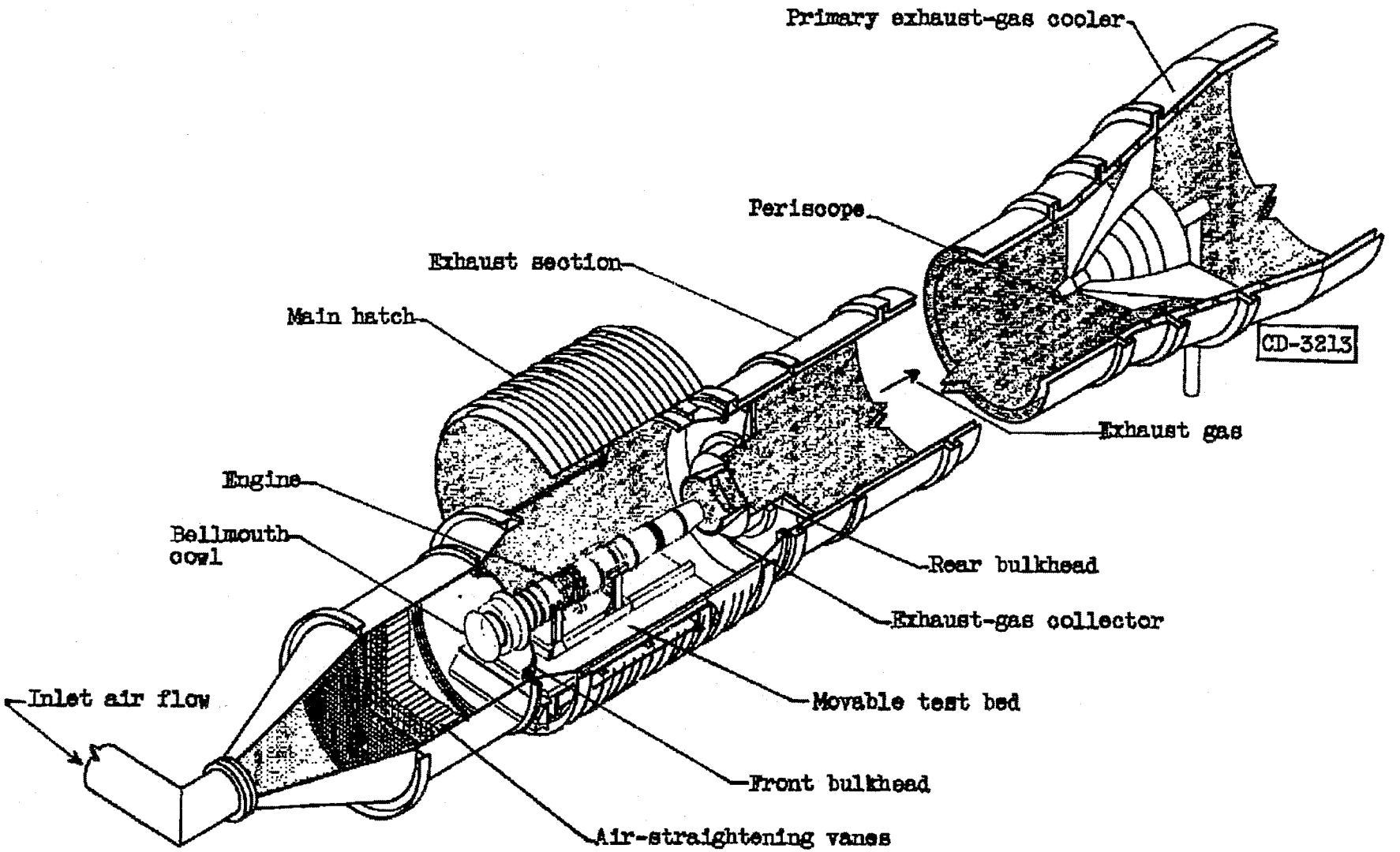

Figure 2. - Altitude chamber with engine installed in test section.

In view of the excessive electrical load proposed for this laboratory, combustion air reheat by means of natural gas-fired heat exchangers can be accomplished for Phase I by extending the existing gas system. The present gas supply capacity, however, is approximately 2/3's of the estimated requirements for Phase II. Conferences with the East Ohio Gas Company indicate that future supply capacities will be adequate for Phase II.

The air temperatures required are:

	Gas Requirements (90-percent efficiency)
190° F for 300 pounds per second (when this capacity is available)	From 90° F — 30,000 cfh
225° F for 200 pounds per second	From 90° F — 27,100 cfh
400° F for 75 pounds per second	From 90° F — 23,200 cfh

Refrigerated Air:

Equipment for supplying refrigerated air for testing is not included in the initial installations for the Propulsion Sciences Laboratory inasmuch as the panel has agreed that a considerable amount of pertinent data can be obtained before a refrigerated air system is available. For instance, temperature conditions corresponding to Mach numbers greater than .6 at sea level and 1.5 at 50,000 feet altitude will be attained without refrigerated air. However, a refrigerated air system is essential to simulate lower Mach numbers. Accordingly, plans will be made for future air drying equipment, and the generation of refrigerated combustion air through the use of air-expansion turbines. Information obtained from Mr. Stoeckley is to the effect that the General Electric Company has been using this method of obtaining refrigerated air for

testing for a number of years and is contemplating the installation of a recirculating system delivering 240 pounds per second of refrigerated air for compressor testing. For the Propulsion Sciences Laboratory a similar, but not recirculating, system can be used which will include an aircraft-engine turbine or compressor rotor coupled to a compressor unit for the absorption of work necessary in the process of reducing the combustion-air temperature by this method. Reports and experience indicate that several conventional aircraft-engine parts can be adapted for the installation to produce refrigerated air. Mr. Stoeckley reports that control of temperature and quantity is accurate.

Exhaust System:

The component parts of the exhaust system are the exhaust-gas coolers, exhausters, intercoolers, piping, valves, and controls. The capacity of the initial installation shall be that required to evacuate exhaust gases (at a temperature of 3500° F) resulting from burning a fuel-air mixture with a combustion-air flow rate of 100 pounds per second, when the outlet pressure at the test stand is equivalent to that at an altitude of 50,000 feet. There will be two or more stages of compression for exhauster inlet pressures of about 8.5 inches of mercury absolute and lower, each with a compression ratio of approximately 3.75. This will make possible the evacuation of gases in two stages of compression with a minimum inlet pressure at the exhauster inlet of about 2.5 inches of mercury absolute. It will permit a net draft loss between the engine outlet and the exhauster inlet of about 1 inch of mercury.

There will be 13 exhauster units, 10 for the first stage and 3 for the second stage of compression. The exhausters shall be so interconnected and so powered (5100 horsepower or greater) that any one of them can be used for the first, second, or the third stage compression as required. Each exhauster unit shall have two J-33 compressor wheels with adapted housing connected for tandem drive and for parallel operation of exhaust-gas evacuation. Each exhauster shall be capable of evacuating exhaust gases at the rate of approximately 121,600 cubic feet per minute at 11,500 rpm. Detailed analysis will determine how evacuation of gases at near sea-level conditions can best be done. The load for the exhausters shall be controlled by varying the number of units in service and by bleeding in air to maintain stability of operation in the machine.

Analysis is now being made to determine whether the exhaust gas coolers should be of the wet or dry type. The exhaust piping and valves shall be sized for the ultimate capacity of exhaust gases.

Power Supply:

The total power required for compressing 240 pounds of air per second to 55 pounds per square inch absolute with the converted J-33 compressor, when a compressor efficiency of 66 percent is used, is 30,000 horsepower. The power required by each exhauster evacuating at a constant inlet volume is 5100 horsepower at a compression ratio of about 3.75 or a total for the 13 exhausters of 66,300 horsepower. To these power requirements 20,000 horsepower may be added

for auxiliary equipment, including the cooling-water system. The total installed power requirement for the initial installation, therefore, is 116,300 horsepower or about 88,000 kw.

The proposed Propulsion Sciences Laboratory will require practically duplicating Substation A by the addition of 120,000 kva of 132,000 to 34,500-volt transformation and switching equipment at Substation A. This addition is based on two new 132-kv incoming lines with 65,000 kva of transformer capacity for each line. With these added lines (two) the off-peak demand may be 262,000 kva.

Availability of Testing Time:

The power requirements of the Propulsion Sciences Laboratory are much in excess of the permissible daytime electric load. Therefore, the research facility will have to operate on a night shift, that is, from 11:00 p.m. to 7:00 a.m. and at high load factors. The present Altitude Wind Tunnel and the Eight- by Six-Foot Supersonic Tunnel also must operate on this shift with the possible addition of the Eight- by Eight Supersonic Tunnel. Four major facilities, of which one facility may be increased by two or more additional test stands or altitude chambers, will be operating on the night shift so that the 8-hour night shift for 7 days per week will have to be divided among five or more major power-using test facilities. The power requirements as foreseen at the present time (i.e., including Phase I of the Propulsion Sciences Laboratory) are:

	Phase I, kw	Expansion, kw
Altitude Wind Tunnel	40,000	(Expansion to proposed 625 lb/sec lab capacity.)
Engine Research Building	28,500	
Eight- by Six-Foot Supersonic Tunnel	90,000	
Eight- by Eight-Foot Supersonic Tunnel	183,000	
Propulsion Sciences Laboratory	88,000	201,000

Increases in the number of power lines coming to the Laboratory will be necessary, although limitations definitely exist both as to off-peak power demand and off-peak power supply and power-line capacity.

The electric power company should be asked regarding the possibility of the large required increase in firm demand beyond the 20-percent increase already indicated as possible. It is emphasized that the intended future expansion of the Propulsion Sciences Building (to a 625-pound-per-second capacity) would require an increase in firm demand to approximately 260,000 kw on the same operation basis. The present peak capacity of the power company system is stated to be 804,000 kw (714,000 kw continuous) with an additional capacity of 180,000 kw being added by 1950 and 75,000 kw by 1952, making a total peak capacity of 1,059,000 kw or 969,000 kw continuous capacity. The estimated firm demand of the Laboratory will be approximately 8 percent of the present continuous system capacity of the power company and will be increased to approximately 37 percent

A. Silverstein

COMPARISON OF STEAM AND ELECTRIC DRIVE POSSIBILITIES FOR PROPULSION SCIENCE LABORATORY APPLICATION

By A. H. Heidenreich

In order to make a selection as to the method of drive for the proposed Propulsion Science laboratory of NACA, an analysis of the thermodynamic problems involved, together with the economics of power application and the investment required, is essential.

The project provides for drives as follows:

3 - exhausters, either turbine or motor driven, of 13,000 H.P. each

2 - exhausters, either turbine or motor driven, of 10,000 H.P. each

2 - compressors, either turbine or motor driven, of 36,000 H.P. each

The total power requirement is then 131,000 H.P.

The operation of the Propulsion Science laboratory, as outlined and insisted upon by the Research Division of the Cleveland laboratory and which will serve as the basis of this analysis, is as follows:

(a) The project will operate 24 hours per day seven days per week and 52 weeks in the year.

(b) For 10 days of each month (24 hours per day) the laboratory shall operate at 100 percent load or 105,500 kw. For the remaining 20 days of each month (24 hours per day) the tunnel shall operate at 50 percent load.

ANALYSIS OF POWER REQUIREMENT

PROJECT "AF"

It is proposed to obtain steam turbines and flash boilers from the U.S. Navy to provide the drive for the above units. The turbines are to serve as direct mechanical drives, the electrical link being omitted.

The boilers obtainable will each provide 257,000 pounds of steam per hour at 600-pounds gauge and 850° F.

The major obstacle in providing the facilities for this research project involves the disposal or absorption of a tremendous amount of waste heat. To utilize as much of this heat energy as possible is very desirable, providing it can be economically accomplished.

Operating characteristics and the necessary requirements are shown in the following table:

Days per month 24 hours/day	Compressed air 40 psi gauge	Altitude exhaust 50,000 feet	Preheated air atmos. pres., 390° F
7.5	450 lb/sec	110 lb/sec	0
2.5	0	110 lb/sec	450 lb/sec
15.0	225 lb/sec	55 lb/sec	0
5.0	0	55 lb/sec	225 lb/sec

The preheated air requirements may consist of the following:

450 lb/sec at 330° F

300 lb/sec at 410° F

120 lb/sec at 600° F

During burner and jet tests it is assumed the air-fuel ratio will be 14 and the maximum exhaust gas temperature will be 3500° F.

Cycle of operation (initial phase): - Jet units under test will require $\frac{450}{14}$ = 32.1 lbs of fuel/sec

Btu/lb of fuel = 19,000

32.1 x 3600 = 115,700 lbs of fuel/hr

115,700 x 19,000 = 2,200,00,000 Btu/hr

The temperature of the gases discharged from jet-engine and burner tests will be approximately 3500° F and will serve as a source of heat for steam generation when available under these conditions.

From the test units it is contemplated to pass the total volume and Btu content of these gases through a heat exchanger or waste heat boiler to generate steam at 600-pounds gauge and 850° F. In addition to the waste heat boiler there will be a battery of 8 oil-fired marine-type boilers to furnish the necessary steam requirements over and above that amount provided by the waste heat recovery. During the start of any test the steam required to drive the compressors and exhausters will be supplied entirely by the oil fired boilers.

Other uses for steam will be in the intake air preheater and make-up water evaporator. Any surplus steam from the waste heat boiler will be dissipated to the cooling tower. Building heating will also be accomplished by this steam, thus eliminating the need for a steam heating plant.

Analysis of steam production and requirements:

(a) Maximum quantity of steam generated by heat from discharged gases:

Btu content of steam at 600-pounds gage and 850° F is 1437.22 Btu/lb

Using feed water at 100° F with heat content of 68 Btu/lb the heat required to produce one pound of steam is

1437.22 - 68 = 1369.72 Btu/lb

Assuming a boiler efficiency of 75 percent

$\frac{1369.22}{.75}$ = 1825 Btu required to produce one pound of steam

$\frac{2,200,000,000}{1825}$ = 1,205,000 pounds of steam/hr generated by discharged gases

(b) Mechanical power requirements:

Connected load = 131,000 H.P.

131,000 x 8 = 1,048,000 pounds of steam/hr for drive

(c) Steam required to preheat intake air

(1) 450 lbs/sec heated from 100° to 390° F

(390 - 100) x 24 x 450 x 3600 = 113,000,000 Btu/hr

Assuming that the superheat and heat of vaporization is removed from the steam at 600-pounds pressure.

1437.22 - 476 = 961.22 Btu removed from 1 pound of steam

$\frac{113,000,000}{961.22}$ = 117,500 pounds of steam/hr

(2) 225 lbs/sec heated from 100° F to 390° F

$$\frac{(390 - 100) \times .24 \times 225 \times 3600}{961.22} = 58,750 \text{ pounds of steam/hr}$$

Cooling tower water requirements:

(a) Cooling water for steam turbine condensers

At condenser operation of 2 in. Hg abs. the heat of vaporaization in each pound of steam = 1035.2 Btu, temperature of condensate = 102° F

$$\frac{1,048,000}{60} = 1035.2 = 18,100,000 \text{ Btu per minute}$$

$$\frac{18,100,000}{10 \times 8.34} = 217,000 \text{ gal/min for condensors}$$

(b) Cooling water to remove surplus heat

1,048,000 x 1437.22 = 1,505,000,000 per hour converted into steam for turbines

2,200,000,000 - total Btu

1,505,000,000

695,000,000 - Btu surplus to be dissipated in cooling tower

$$\frac{695,000,000}{10 \times 8.34 \times 60} = 139,000 \text{ gal/min}$$

(c) Summary

217,000 - gal/min for condensers

139,000 - gal/min for waste heat

356,000 - total gal/min to be circulated

OPERATING COST OF STEAM PLANT

The operating characteristics as specified by the Research Division are set forth in the following premise:

The plant will operate at full load and 100 percent load factor for 10 days each month. For the remaining time (or 20 days of each month) the plant will operate at half load (or 50 percent load factor).

For 25 percent of the time of each of these periods of operation, it is contemplated that compressors only will be on test; i.e., there will be no burners in operation and all steam requirements will be supplied by the oil fired stand-by boilers. Also the compressors will take air, preheated from 100° to 390° F and at atmospheric pressure.

The steam plant is assumed to consist of eight boilers and turbines as described on page 1.

(a) Personnel costs

Position	Men per shift (8-hour day)	Total men	Wage scale	Total wages per month
Watch engineer	1	4	$400/month	$1600.00
Boiler operator	3	12	1.75/hr	3700.00
Turbine room	8	32	1.75/hr	9850.00
Relief man	———	5	1.75/hr	1540.00
Oil handlers	1	4	1.25/hr	880.00
Chief engineer	1	1	$600/month	$600.00
Asst. chief engineer	1	1	500/month	500.00
Clerk	1	1	250/month	250.00
Janitors	3	3	1.10/hr	580.00
Maintenance men	12	12	1.60/hr	3390.00
		75		$22,890.00

(b) Fuel costs

Full load period:

Item 1: For $7\frac{1}{2}$ days the oil fired boiler plant will operate as standby only holding temperature and pressure.

24 x 7.5 x 118.3 x 8 = 171,000 gallons of oil for standby period.

Item 2: For $2\frac{1}{2}$ days during compressor tests all the steam required for the various drives will be furnished by the oil fired boilers.

1,048,000 = lbs steam/hr total required

576,000 = lbs steam/hr required by compressor

472,000 = lbs steam/hr required by exhauster

117,500 = lbs steam/hr required by preheater

589,500 = lbs steam/hr furnished by oil fired boilers

$\frac{589,500 \times 1825}{19,00 \times 75}$ = 7730 gallons of fuel oil per hour

2.5 x 24 x 7730 - 464,000 gallons of fuel oil for period

Total of 10-day full-load period:

171,000

464,000

635,000 gallons of fuel oil

Half load period:

Item 3: For 15 days, operation will be same conditions as Item 1.

2 x 171,000 = 342,000 gallons of oil required for standby period of oil fired boilers.

Item 4: For 5 days the operation will be the same conditions as Item 2.

$\frac{2 \times 464,000}{2}$ = 464,000 gallons of fuel oil required

Summary of monthly fuel consumption:

Item 1 = 171,000 gallons

Item 2 = 464,000 gallons

Item 3 = 342,000 gallons

Item 4 = 464,000 gallons

1,441,000 gallons of fuel oil per month

At a cost of $0.10 per gallon:

1,441,000 x $0.10 = $144,100.00 - fuel cost per month

(c) Make-up water cost

Full load period:

Item 1: 356,000 x 60 x 24 x 7.5 = 3,860,000,000 gallons of circulating water for 7.5 days of full load operation

Item 2: $\frac{450 \times 3600 \times 24 \times 2.5\ (1000 - 100) \times .24}{10 \times 8.34}$ = 251,500,000 gallons of circulating water to cool hot air discharged from compressors

217,000 x 60 x 24 x 2.5 x .45 = 353,000,000 gallons of circulating water for condensers.

251,500,000

353,000,000

604,500,000 gallons required for compressor tests during 2.5 days

Half load period:

Item 3: $\frac{2 \times 3,860,000,000}{2}$ = 3,860,000,000 gallons for 15 days of 50 per cent load operation

Item 4: $\frac{2 \times 604,500,000}{2}$ = 604,500,000 gallons for 5 days of 50 per-cent load operation

Summary of cooling water:

Item 1 = 3,860,000,000

Item 2 = 604,500,000

Item 3 = 3,860,000,000

Item 4 = 604,500,000

8,929,000,000 gallons of water circulated per month

Cost of make-up water per month:

$\frac{8,929,000,000 \times .05}{7.48 \times 1000}$ = $59,800.00

(d) Maintenance materials and supplies costs

Maintenance cost of boilers, steam turbines, and piping based on $0.15 per 24,000,000 Btu passing through boilers:

1,441,000 x 7.5 x 19,000 = 205,500,000,000 Btu passing through boilers per month.

$\frac{205,500,000,000 \times .15}{24,000,000}$ = $1,285.00 for oil fired boilers

$\frac{853,000,000,000 \times .05}{24,000,000}$ = $1,780.00 for additional piping

$3,065.00 maintenance for one month

Summary of Monthly Operating Cost for Steam Plant

(a) Personnel cost	$22,890
(b) Fuel cost	144,100
(c) Make-up water cost	59,800
(d) Maintenance and materials	3,650
	$230,440 per month

Cost of operating steam plant per year:

$230,440 x 12 = $2,765,000.00 per year.

Boiler Room and Turbine Room Construction Cost

(a) Steam power plant piping

$10.50 per H.P.

131,000 x 10.50 = $1,375,000.00

(b) Building cost (boiler room only)

Assume size to be 136 ft x 63 ft x 40 ft high at $1.00 per cu ft

136 x 63 x 40 x 1.00 = $343,000.00

(c) Boiler foundations

Assume size to be 19 ft x 13 ft x 6 ft deep at $200.00 per cu yd

$\frac{19 \times 13 \times 6}{27} \times 200 \times 8 =$ $88,000.00

(d) Boiler erection and setting

Assume cost of new boilers to be $100,000.00 each and the cost of dismantling and erection to be 70 percent of new cost

100,000 x 8 x .70 = $560,000.00

(e) Breeching and stack and air ducts are taken as 10 percent of the boiler cost (new)

800,000 x .10 = $80,000.00

(f) Railroad spur line

Assume 6400 ft of 120# rail at $15.00 per single track foot

6400 x 15 = $96,000.00

switches and siding = 20,000.00

$116,000.00

(g) Steam driven auziliaries are equal to boiler cost.

Cost of boilers = auxiliaries = $800,000. If all the auxiliaries, circulating pumps, vacuum pumps, feed water pumps, feed water heater, induced draft fans, forced draft fans, etc. are provided with the equipment under consideration, there will, of course, be no cost to NACA for their procurement. However, the cost of installation must be included in this estimate. The factor is 30 percent.

The cost of installation alone is as follows:

800,000 x .3 = $240,000.00

(h) Installation of steam turbines

Installation of turbines is based on the cost of $1.00 per H.P.

131,000 x 1 = $131,000.00

(i) Condenser installation cost

The cost of installing the turbine condensers is based on a cost of 15 percent of the new value. The cost of a 15,000 H.P. condenser is $32,000.00. Eight will be required.

32,000x 8 x .15 = $38,400.00

(j) Cost of turbine room

The turbine room is assumed to be 58 ft wide, 340 ft long, and 30 ft high with a 20-ft basement. The cost of this building is taken as $1.00 per cubic foot

58 x 340 x (30 + 20) x 1.00 = $990,000.00

(k) Cost of turbine foundations

The cost of each foundation is $15,000.00

8 X 15,000 = $120,000.00

(l) Cost of fuel oil storage tanks

For storage facilities to handle a two-week period,

$16,000 for 100,000 gallon capacity

7 X 16,000 = $112,000.00

Summary of Boiler and Turbine Room Costs

(a) Steam power plant piping	$1,375,000.00
(b) Boiler room	345,000.00
(c) Boiler foundations	88,000.00
(d) Boiler erection and setting	560,000.00
(e) Breeching, stacks, and air ducts	80,000.00
(f) Railroad spur line and siding	116,000.00
(g) Installation of power plant auxiliaries	240,000.00
(h) Installation of turbines	131,000.00
(i) Installation of condensers	38,000.00
(j) Turbine room	990,000.00
(k) Turbine foundations	120,000.00
(l) Fuel tanks	112,000.00
	4,193,000.00
Engineering at 5 percent	209,650.00
	$4,402,650.00

The cost of a cooling tower is not included in this final cost.

Promise "B"

It is proposed to drive the above compressors and exhausters with electric motor instead of steam turbines. The heat in the exhaust gases discharges from the research units will be transferred to cooling water in heat exchangers and dissipated in a cooling tower.

Cycle of operation. - The cycle of operation will be identical to that specified in the steam drive under Promise "A".

Operating Cost of Electric Drive

(a) Personnel cost

Position	Men per shift (8-hour shift)	Total men	Wage scale	Total wage per month
Operators	2	8	$333/month	$2665.00
Engineer	1	1	417/month	417.00
				$3082.00

(b) Power cost

Computed power cost as set by cycle of operation $196,501.00

This cost based on a firm load demand of 97,500 kw. If off peak operation were possible the cost of power would be $160,000.00.

(c) Make-up water costs

The calculations of the steam plant show that 8,929,000,000 gallons of water are circulated each month. With the electric

drive an additional amount of water will be circulated because all the waste heat will be dissipated into cooling water and none converted into mechanical work.

1437.22 - 1035.22 = 402 Btu per pound of steam which was formerly absorbed as work.

2 X 217,000 X 60 X 24 X 7.5 = 4,700,000,000

2 X 97,800 X 60 X 24 X 2.5 = 705,000,000

5,405,000,000 gallons of water/month to condense steam from drive

$\frac{402}{1035.22}$ X 5,405,000,000 = 2,120,000,000 gallons additional

8,929,000,000

11,049,000,000 gallons circulated/month

$\frac{11,049,000,000 \text{ X } .05 \text{ X } 1}{7.48 \text{ X } 1000}$ = $74,000.00 - cost of make-up water/month

(d) Maintenance materials and supplies

Electrical maintenance = $200.00 per month

Summary of Monthly Operating Cost for Electric Drive

(a) Personnel cost	$3,082.00
(b) Power cost	196,501.00
(c) Make-up water cost	74,000.00
(d) Maintenance and materials	200.00
	$273,783.00 per month

273,783 X 12 = $3,280,000.00 per year

Cost of Electric Drive and Drive Building

(a) Cost of electric drive

Electric motors, switchgear, transformers, regulating equipment, substation, mechanical reduction gears, installation, labor, and materials $2,750,000.00

(b) Cost of drive building

Same as turbine room $990,000.00

(c) Drive foundations

Same as turbine foundations $120,000.00

Summary of Electric Drive and Drive Building

(a) Electric drive	$2,750,000.00
(b) Drive building	990,000.00
(c) Drive foundations	120,000.00
	$3,860,000.00
Engineering at 5 percent on (b) and (c)	55,500.00
	$3,915,500.00

The cost of the cooling tower is not included in this final cost.

From the foregoing analysis it is evident that for low load factors (for example, 25 percent and under) and where the electric drive can be operated during off peak periods, thus eliminating the heavy burden or penalty of cost of firm load demand, the balance would be in favor of the electric drive, both from a construction cost viewpoint and from an operating cost viewpoint.

DEDUCTIONS AND REMARKS

The promise upon which this comparison between steam and electrical drive is based, as mentioned earlier, is particularly favorable to steam plant operation because of the high load factor. Such a load factor makes it necessary to operate the drive at full power during on peak periods, thereby increasing the cost of energy chargeable to this project by a firm load demand charge corresponding to 105,500 kw.

The analysis was made without the assistance of even rough preliminary drawings and which together with information of a more or less reliable nature, indicates that the result, as shown, is purely an approximation. However, it will provide some data on which to base conclusions and will indicate operating conditions favorable to either type of drive.

To determine the limits from a power availability viewpoint to which it is possible to expand the Cleveland laboratory facilities, the following will serve as a criterion:

The proposed Propulsion Science laboratory power demand will be 98,000 kw for the compressor and exhauster drives plus the auxiliary requirement of approximately 7500 kw.

The kw demand for this project will then be 98,00 + 7500 = 105,500 kw.

The existing firm load demand is currently in the neighborhood of 40,000 to 45,000 kw, superimposing the Propulsion Science laboratory load on this we have

105,500 kw + 45,00 = 150,500 kw firm load demand

The off-peak demand considering the 8' X 6' tunnel in operation is

8' X 6' demand -	90,000 kw
Propulsion Laboratory demand -	105,500 kw
Off-peak demand required -	195,500 kw

The off-peak demand considering the proposed 8' X 8' tunnel in operation would be

8' X 8' demand -	150,000 kw
Propulsion Laboratory demand -	105,500 kw
Off-peak demand required -	255,500 kw

The capacity of the existing 2-132 kv transmission circuits now serving the Cleveland laboratory is 130,000 kva which at 95 percent power factor is 123,000 kw. If the proposed two additional 132 kv transmission circuits were installed (making

a total of four such circuits) the capacity available at the Cleveland laboratory would be increased by 120,000 kva. The total capacity available at the Cleveland laboratory would then be:

130,000 + 120,000 = 250,000 kva which at 95 percent power factor would make available:

250,000 X .95 = 238,000 kw maximum

It is obvious that even four transmission circuits will not provide the demand of 255,500 kw needed.

This means that the electrical drive for the Propulsion Science laboratory cannot be considered.

If the requirements of the proposed Propulsion laboratory are as stipulated, then we may analyze still further:

From the summary of promise "B" we have

Power cost per month -	$196,501.60
Make-up water cost per month -	74,000.00
Total cost per month -	$270,500.00

If this project could be located where cooling water of 55° F were available and the power could be purchased in the neighborhood of $0.0025 per kwh, such as the site contemplated for a proposed Supersonic Research Center, the following results would be obtained:

Power cost:

40,520,000 kwh at $0.0025 = $101,300.00

Cooling water cost:

The water could be circulated and discharged back into the river without paying for it, and there would be no charge for water.

The total cost per month for both water and electric energy would then be $101,300.00.

The saving in cost per year for these items alone would then be

(270,500 - 101,300) X 12 = 169,200 X 12 = $2,015,000.00

In addition to the above saving in operating cost, there would be a saving in construction cost. If the water were circulated and returned to the supply source, it would be unnecessary to provide a cooling tower, the estimated cost of which for the 358,000 rpm required is $5,500,000.00.

The above savings are predicated on the requirements as stipulated and are for the first or initial phase alone. No provision has been included for any expansion whatsoever. It was specifically stated by the Research group that considerable expansion was certain and probably in the magnitude of 3 or 4 times that of the initial phase analyzed herein.

If such is the case, then NACA has no existing laboratory at which this project could be located, irrespective of the type of drive.

The following items merit serious consideration before decisions on the Propulsion Science laboratory are rendered:

Item 1:

Will fuel oil for boiler operation be available in the amount of 1,441,000 gallons per month for the initial phase of the project?

Will fuel oil for boiler operation be available in the amount of approximately 5,764,000 gallons per month for an expansion factor of 4?

The boilers available from the Navy are marine type and designed for oil burning. They are also designed to occupy the least amount of space possible. They are entirely different than boilers designed for land operation and cannot be arranged for coil firing.

If the oil is not available, it would be necessary to purchase new boilers and this would mean an additional investment of approximately $800,000.00.

Item 2:

Building of a cooling tower capacity of approximately four times the capacity mentioned herein to provide for the expansion of the project as specified. (Approx. cost $14,000,000.00)

Cost of make-up water for the expansion of the project as stated above, when consideration is given to the fact that it could be circulated without cost if located at the proper site. Much less water would be required at 55 to 60° F than at 85° F.

Item 3:

Will it ever be possible to obtain off-peak energy in the amount of 200,000 kw to 400,000 kw of demand? The power company itself could never make such a guarantee. The only promise from them is that if they have it available, NACA could have it. Certainly the time in which a condition could be brought to pass whereby it could be made available, irrespective of cost of so doing, would be many years in the future.

SUGGESTIONS

Due to the magnitude of the power requirements of proposed and installed tunnel projects at the Cleveland laboratory, such as the altitude tunnel of 40,000 kw, the 8' X 6' supersonic tunnel of 90,000 kw, the Propulsion Science laboratory of 105,500 kw, and the 8' x 8' supersonic laboratory of approximately 150,000 kw, it is suggested that a thorough study of the dispatching possibilities of these loads be undertaken in the near future.

This study should be made with the Research group in charge of each project taking part in the analysis with the Electrical Operation section. The object is to determine the use factor required for each project and thus determining whether or not such a use factor can be made available by proper dispatching. In other words the off-peak and firm load demands depend upon the manner in which the various loads must be pyramided to obtain research production.

It appears certain that the tunnels must have a definite use factor if the trained research staff responsible is to obtain efficiency production; i.e., production to a certain degree is a function of use factor.

CONCLUSIONS

The remarks and deductions stated herein are an integral part of such an analysis and have a bearing upon the pertinence of the application.

/s/ Allan H. Heidenreich

/s/ Alois Krsek Jr.

C O P Y

GENERAL ELECTRIC CO.
Schenectady, N.Y.

1 River Road
Schenectady 5, N.Y.
December 5, 1947

Mr. A. M. Heidenreich
National Advisory Committee for Aeronautics
Cleveland Airport
Cleveland, Ohio

Dear Mr. Heidenreich:

Here are some figures in which you may be interested. You will recall that Langley put in a 10,000 HP Diesel Plant. If my memory serves me, that plant cost $1,000,000. Today such a plant would cost $1,400,000. This Navy equipment could be rated 80,000 KW and today a complete electric generating station would cost installed $140.00 per Kw, or about $11,000,000. Assuming the Navy equipment to be worth $3,000,000 and the electrical end $1,500,000, this would leave the installation, plant facilities, etc. at $6,500,00, but suppose we discount this 30% because the same degree of continuity of service is not required on a research project as would be required for a central station project. This still requires an investment of about $4,500,000.

This entire subject was discussed with our power plant section and they placed the cost of installing this equipment at $6,000,000. They also said the rating on Navy boilers is a short time rating and boilers if run at that rating are very inefficient, that they could probably only be run an hour at full power and that after 4 such runs, boiler repairs would in all probability be required.

These Navy boilers do not meet ASME codes, and may not be used in many states for land installations. It costs about 70% of the cost of new boilers to dissemble them and reassemble them at some new location.

Usually they give a cruiser speed, or ship speed, at so many knots, and a horsepower rating based on that speed. The ship may never be run at that speed except on her trial trip and during a battle. If her top speed is 30 knots, her cruiser speed would be about 18 knots. Thus, boilers rated 250,000# per hr, would be used and efficiently designed for about 65,000# per hr.

This applies to the turbines as well. Of course more capacity can be built into ships and some of the new aircraft carriers have followed more nearly land practice but I would not take any ones word on suitability

C O P Y

REPORT OF THE SPECIAL PANEL ON THE PROPULSION SCIENCES LABORATORY
WPRL - CLEVELAND, OHIO

From a review of information now available on present propulsion systems for aircraft and guided missiles, the Panel has endeavored to forecast the future requirements in research facilities for obtaining fundamental research information on these propulsion systems. The facilities have been selected with the object of obtaining and having available when required by the designer, the necessary fundamental information on compressors, combustors, turbines, controls, and supersonic ram jets for present and future designers of propulsion systems.

The Panel has endeavored to foresee and predict what the future requirements of research facilities will be. It is realized that planning for the future is absolutely necessary if basic research information is to be available when required by the designers of future propulsion systems. The methods of execution for these plans must be practicable and result in a research facility that works. The principal requirements of such a unique research facility are that it must be capable of being expanded, that it must be located close to a source of electric power unrestricted in quantity and low in cost and that it must be capable of being operated 24 hours per day, seven days a week. It is only by fulfilling these requirements that rapid progress can be made in carrying out the necessary fundamental research programs. The specification of 24 hours availability of the research facilities has already been built into three of the industrial development laboratories for jet engines. If this requirement has been found to be necessary for development work, how much more necessary it is that the research facility supplying the fundamental information on which the development is based, should be operated on a 24 hour per day basis;

The laboratory, if assigned to the Flight Propulsion Research Laboratory, will be located at the southwest section of the plot adjacent to substation A. The proposed location is shown on SKS 604-4. The laboratory will supply combustion air and have exhaust capacity at the following quantities and pressures:

(a) 625 pounds per second at 55 pounds per square inch absolute pressure. 2 x Mene @ M = 1.6

(b) 400 pounds per second at 165 pounds per square inch absolute pressure. 1/2 x Mene @ M = 2.3

(c) 55 pounds per second at a pressure equivalent to 80,000 feet altitude. (Motor power for operation down to sea level) Mene @ M = 2.8

(d) Combustion air at -100° F.

The air will be supplied to eight altitude chambers 15 feet in diameter and 230 feet in overall length, located at right angles to the combustion air and exhaust gas headers. This arrangement will permit the future expansion of the laboratory with no interference to equipment already installed. The proposed layout of facilities is shown in SKS 604-4. The general arrangement of the altitude chamber is shown in Figure 1.

The electrical load for the completed laboratory is estimated to be a maximum of 276,500 KW.

PROPULSION SCIENCES LABORATORY - PHASE I:- The Congress has been requested to make available $10,000,000 for the completion of Phase I of the Propulsion Sciences Laboratory. The Panel has selected research facilities which will contribute to the immediate solution of propulsion research problems and will be integrated as a portion of the research facilities for the complete Propulsion Sciences Laboratory. The Panel has endeavored not to exceed the amount appropriated, but it has been found impossible to fulfill the minimum air requirements selected by the Panel as necessary for Phase I of the

laboratory and not exceed the available money by $478,000.

The Propulsion Sciences Laboratory Phase I is designed to permit fundamental information to be obtained on the performance of jet engines, turbo-propeller engines, and supersonic ram jet engines under altitude conditions from sea-level to 50,000 feet altitude. The laboratory air systems when completed will supply the following:

(a) 225 pounds per second of air at 55 pounds per square inch absolute pressure. .67 x Nene @ M = 1.6

(b) 100 pounds per second of exhaust at a pressure equivalent to 50,000 feet altitude. 8 x Nene @ M = 0. Nsms @ M = 1.75

The operation limits of the proposed service air facilities for conducting research on turbojet engines from 5000 to 15,000 pounds of thrust are shown in Figure 2.

The total installed power requirement for Phase I is approximately 96,000 KW.

SUMMARY OF COSTS:- A summary of the costs of Phase I of the Propulsion Sciences Laboratory is as follows:

AIR SYSTEM	$1,213,000
EXHAUST SYSTEM	2,506,000
POWER SUPPLY	1,756,000
PROCESS WATER SYSTEM	760,000
RESEARCH EQUIPMENT	1,510,000
BUILDING, UTILITY, ROAD, Etc.	2,448,000
CONTROL ROOM	285,000
TOTAL	$10,478,000

The estimated costs are based on economic conditions existing in 1947 and may be increased by an estimated 25 percent in 1948.

A detailed explanation of each of these items is given in Appendix A of this report prepared by the Technical Service Divisions.

At the request of the Panel, a comparison has been made by the service divisions to determine whether steam turbines or electric motors should be used as the driving units for the compressors and exhausters. The comparison showed definite advantages for the electric motor drive.

The number of research facilities now located at the Flight Propulsion Research Laboratory and those planned for the future will greatly increase the electrical load at the laboratory. An analysis of present and future requirements of electrical power at the laboratory has been prepared by Mr. Allan Heidenreich. The entire report is included as Appendix B. The report shows that to fulfill the requirement of a high use factor for the Propulsion Sciences Laboratory consideration must be given to locating the Laboratory close to a source of cheap power that will be available 24 hours per day.

RECOMMENDATIONS:- The Panel recommends that a definite decision be made as to the location of the Propulsion Sciences Laboratory to fulfill the requirement of a high use factor; that the design of the Propulsion Sciences Laboratory Phase I be contracted for with an outside organization; and that Phase I of the Propulsion Sciences Laboratory be completed by June 1950.

Carlton Kemper, Chief

Oscar W. Schey

Benjamin Pinkel

Abe Silverstein

John H. Collins, Jr.

C. S. Moore

January 21, 1948

CK:lgp

APPENDIX A

PROPOSAL FOR PROPULSION SCIENCES LABORATORY

NPRL - CLEVELAND, OHIO

PHASE I

Description, Itemization, and Cost Estimates

General Description:

The purpose of the proposed project is to provide facilities for testing full-scale aircraft engines, such as turbojet or turbine-propeller and ram-jet engines, under simulated altitude operating conditions. The principal facilities furnished shall be a compressed-air system for combustion-air supply, an altitude-exhaust gas system, and research-equipment installations for engine testing. The project includes electric power supply connections, a process water system, buildings for housing equipment and personnel, access roads, equipment controls, intercommunications, and fire and accident protection.

The proposed immediate installations will provide an air supply system to furnish combustion air at the rate of 225 pounds per second at a pressure of 55 pounds per square inch absolute; it will provide an altitude-exhaust system to evacuate exhaust gases at the rate of 100 pounds per second (in addition to fuel) at altitude conditions of 50,000 feet; and it will provide a process water system sufficiently large to furnish water for exhaust-gas coolers, compressor aftercoolers, and other heat exchangers.

These installed capacities, however, are regarded as the first increment of installations to be made. It is proposed to increase these

capacities by additional construction from subsequent appropriations. The initial capacities are sufficient in themselves to permit testing complete aircraft power plants over a wide range of operating conditions. The ultimate capacities planned are for a combustion-air supply of 625 pounds per second at a pressure of 55 pounds per square inch absolute and of 400 pounds per second at a pressure of 165 pounds per square inch absolute; a refrigerated-air supply of 145 pounds per second at a temperature of -20° F, 75 pounds per second at -70° F, and 60 pounds per second at -100° F; and an altitude-exhaust system to evacuate exhaust gases at the rate of 55 pounds per second to simulate an altitude of 60,000 feet.

Adaptation of the J-33 Compressor Motor for Compressing Air and Evacuating Exhaust Gases:

For the most economical installation, it is proposed to adapt the compressors of the J-33 jet propulsion engine for the compression of air in the combustion-air system and for the evacuation of exhaust gases in the altitude-exhaust system. Preliminary estimates indicate that the saving realized by the use of the J-33 compressor, over that of the conventional equipment, is approximately $2,000,000 for the proposed immediate installation (i.e. Phase I). The saving in the use of these compressor rotors occurs in the initial cost of the rotor in the smaller machine units, as compared to the larger and slower commercial compressor units, in the smaller sized building necessary to house the compressors and in the smaller foundation required. Coupled to these advantages is the higher performance efficiency of the J-33 compressor impeller, which results in lower power requirements to handle the same

volume of air or exhaust gases. Less electric motor starting torque will be required which is of importance in motor cost.

Mr. E. E. Stoeckley of General Electric Company states that he knows of no reason why compressors of the J-33 type cannot be used for the above-stated purpose for an indefinite period of time. He states that his company used J-33 compressor wheels for compressing air in an installation with an expansion refrigerating turbine as long as 4 years before any inspection was made. The Allison Division gives similar reports based on experience with compressor wheels that have been used for duration tests with service equipment.

In order to adapt the J-33 compressor wheel, which will be driven by a conventional motor through speed stepup gears, for compressing air or evacuating exhaust gases, these compressor wheels may be furnished with redesigned scroll and bells, plenum chamber, shaft bearings, seals and base. However, it may be possible to use the conventional J-33 compressor casings and bearings. Detail analysis and design will determine the proper procedure.

It is pointed out that even if conventional commercial machines were used for the proposed laboratory, machines of the required size have never been made before and the delivery date would be indefinite.

Compressed-Air System:

The component parts of the combustion-air system are the compressors, aftercoolers, piping, valves, pressure controls, and reheaters. The capacity of the initial installation shall be 225 pounds of air per second compressed to 55 pounds per square inch absolute. Piping and valves will be designed for a capacity of 625 pounds per second.

transmission pressures depending upon analysis of required flow conditions and pipe sizes.

For the initial installation there shall be three J-33 converted compressors, each consisting of a single, double-inlet rotor, and each delivering approximately 80 pounds of air per second at an inlet air temperature of 70° F, or a total of about 240 pounds of air per second at a pressure of 55 pounds per square inch absolute. Each compressor unit shall be driven by a 10,000-horsepower motor through speed stepup gears; this will handle air at an inlet temperature of 0° F at 6 percent overload. The normal speed of these impellers for delivering 80 pounds of air per second at a compression ratio of 3.75 is approximately 11,500 rpm. Load control for the compressors shall be by varying the number of compressors in service and by bleeding off excess air.

Pressure regulation at the test stand to supply the combustion air at the required inlet pressures to the engine will be obtained by pressure regulating valves and special controls which will provide inlet pressures varying from 55 pounds per square inch absolute (the pressure delivered by the compressor) down to 3 inches of mercury absolute or lower.

The aftercoolers shall be of the standard design shell and tube type capable of cooling the compressed air to an approximate maximum temperature of 90° F with cooling-tower water.

Reheaters with a minimum electrical capacity of 9000 kva shall be provided for reheating the air to the required temperatures for the corresponding air quantities available for testing.

The air temperatures required are:

	90-percent efficiency
190° F for 300 pounds per second (when this capacity is available)	From 90° F — 8800 kw
225° F for 200 pounds per second	From 90° F — 7930 kw
400° F for 75 pounds per second	From 90° F — 6800 kw

Refrigerated Air:

Equipment for supplying refrigerated air for testing is not included in the initial installations for the Propulsion Sciences Laboratory. It includes, however, the planning of air-dehumidifying equipment and air-expansion refrigeration turbines in the combustion-air system that will make refrigerated air available in a future installation. Information obtained from Mr. Stoeckley is to the effect that the General Electric Company has been using this method of obtaining refrigerated air for testing for a number of years and is contemplating the installation of a recirculating system delivering 240 pounds per second of refrigerated air for compressor testing. For the Propulsion Sciences Laboratory a similar, but not recirculating, system can be used which will include an aircraft-engine turbine or compressor rotor coupled to a compressor unit for the absorption of work necessary in the process of reducing the combustion-air temperature by this method. Reports and experience indicate that several conventional aircraft-engine parts can be adapted for the installation to produce refrigerated air. Mr. Stoeckley reports that control of temperature and quantity is accurate.

Exhaust System:

The component parts of the exhaust system are the exhaust-gas coolers,

exhausters, intercoolers, piping, valves, and controls. The capacity of the initial installation shall be that required to evacuate exhaust gases (at a temperature of 3500° F) resulting from burning a fuel-air mixture with a combustion-air flow rate of 100 pounds per second, when the outlet pressure at the test stand is equivalent to that at an altitude of 50,000 feet. There will be two or more stages of compression for exhauster inlet pressures of about 8.5 inches of mercury absolute and lower, each with a compression ratio of approximately 3.75. This will make possible the evacuation of gases in two stages of compression with a minimum inlet pressure at the exhauster inlet of about 2.5 inches of mercury absolute. It will permit a net draft loss between the engine outlet and the exhauster inlet of about 1 inch of mercury

There will be 13 exhauster units, 10 for the first stage and 3 for the second stage of compression. The exhausters shall be so interconnected and so powered (5100 horsepower or greater) that any one of them can be used for the first, the second, or the third stage compression as required. Each exhauster unit shall have two J-33 compressor wheels with adapted housing connected for tandem drive and for parallel operation of exhaust-gas evacuation. Each exhauster shall be capable of evacuating exhaust gases at the rate of approximately 121,600 cubic feet per minute at 11,500 rpm. Detailed analysis will determine how evacuation of gases at near sea-level conditions can best be done. The load for the exhausters shall be controlled by varying the number of units in service and by bleeding in air to maintain stability of operation in the machine.

The exhauster intercoolers will be of the conventional shell-and-tube or finned-tube type capable of cooling the exhaust gases to a temperature of 125° F or lower. The exhaust piping and valves shall be sized for the ultimate capacity of exhaust gases.

Power Supply:

The total power required for compressing 240 pounds of air per second to 55 pounds per square inch absolute with the converted J-33 compressor, when a compressor efficiency of 66 percent is used, is 30,000 horsepower. The maximum power required by each exhauster evacuating at a constant inlet volume is 5100 horsepower at a compression ratio of about 3.75, or a total for the 13 exhausters of 66,300 horsepower. To these power requirements 20,000 horsepower may be added for auxiliary equipment, including the cooling-water system, and 12,000 horsepower will be added for the maximum combustion-air reheating. The total installed power requirement for the initial installation, therefore, is 128,300 horsepower or about 96,000 kw.

The proposed Propulsion Sciences Laboratory will require practically duplicating substation A by the addition of 120,000 kva of 132,000 to 34,500-volt transformation and switching equipment at substation A. This addition is based on two new 132-kv incoming lines with 65,000 kva of transformer capacity for each line. ~~The two lines will be paralleled on the 34.5-kv side with provisions for normally-open ties to the existing 34.5 bus. Each 34.5-kv bus will have grounding transformer and resistor.~~ With these added lines (two) the off-peak demand may be 262,000 kva.

~~The following protective equipment will be required: overcurrent,~~

transformer differential, and reverse power for each line; bus differential and ground relay for each 34.5-kv bus. Metering equipment, in addition to power company metering, will consist of telemeters, 20 metering conductors to dispatch office for remote metering, and 50 additional conductors to dispatch office for remote alarm and breaker control.

Equipment required for 34.5/6.9 or 13.2 kv transformation will consist of transformers, circuit breakers, and outdoor structure at substation A, power cable tunnel from substation A to Propulsion Sciences Building, and 6,900- or 13,200-volt switchgear located in the building proper.

Additional equipment to include 15,000 kva in transformers together with switchgear, metering, and dispatching facilities will be required for the 2400-volt service for auxiliary power and lighting for this project.

Availability of Testing Time:

The power requirements of the Propulsion Sciences Laboratory are much in excess of the permissible daytime electric load. Therefore, the research facility will have to operate on a night shift, that is, from 11:00 p.m. to 7:00 a.m. and at high load factors. The present Altitude Wind Tunnel and the Eight- by Six-Foot Supersonic Tunnel also must operate on this shift with the possible addition of the Eight-by-Eight Supersonic Tunnel. Four major facilities, of which one facility may be increased by two or more additional test stands or altitude chambers, will be operating on the night shift so that the 8-hour night shift for 7 days per week will have to be divided among

six or more major power-using test facilities. The power requirements as foreseen at the present time (i.e., including Phase I of the Propulsion Sciences Laboratory) are:

	Phase I, kw	Expansion, kw
Altitude Wind Tunnel	40,000	(Expansion to proposed 625 lb/sec lab capacity, including 75,500 kw air-reheating loads.)
Engine Research Building	28,500	
Eight- by Six-Foot Supersonic Tunnel	90,000	
Eight- by Eight-Foot Supersonic Tunnel	183,000	
Propulsion Sciences Laboratory	94,000	276,500
	435,000	618,000

Increases in the number of power lines coming to the Laboratory will be necessary, although limitations definitely exist both as to off-peak power demand and off-peak power supply and power-line capacity. Also, for the 625-pound-per-second laboratory, other means than electrical reheating should be investigated because the capacity of the four possible power lines (238,000 kw) would be exceeded.

To permit operation at 50 percent of capacity for 65 percent of total time (as specified by the Special Panel), the permissible daytime demand of the Laboratory will have to be almost doubled; that is, increased from 50,000 kw to almost 100,000 kw. The electric power company should be asked regarding the possibility of the large required increase in firm demand beyond the 20-percent increase already indicated as possible. It is emphasized that the intended future expansion of the Propulsion Sciences Laboratory (to 625 pounds per second capacity) would require an increase in firm demand to 160,000 kw on the same operation basis. The present dependable capacity of the power company system is stated to be 804,000 kw with an additional capacity of 180,000 kw being added by 1950 and 75,000 kw by 1952, making a total capacity of 1,059,000 kw. Since the present connected load of the Laboratory,

which is approximately 12 percent of the present dependable system capacity, will be increased to approximately 41 percent of the expanded dependable system capacity for Phase I and to approximately 58 percent for Phase II, the electric power company should be asked as to their plans for expansion beyond 1952.

7A and 7B
cmd
1-29-48

Power Cost

It should be noted that the cost of power for operation of the Propulsion Sciences Laboratory at Cleveland is a considerable item. Based on the operating time and capacity proposed, the cost of power including electrical reheat for the 96,000 kw of Phase I will increase the power bill by approximately $220,000 a month or $2,640,000 a year. For the 625-pound-per-second laboratory, but not including electrical reheat, the power bill would be increased by approximately $407,000 a month or $4,884,000 a year.

cmd
1-29-48

Process Water System:

Large quantities of cooling water will be required to cool the exhaust gases before they can be handled by the exhausters, to cool the combustion air after compression, and to cool the exhaust gases before and after the compression stages of the exhausters, or to remove heat from various other auxiliary sources. Heat (if it can not be reclaimed) will be dissipated in a cooling tower and the water will be recirculated for reuse.

The process water system will consist of a cooling tower, water pumps, piping, sediment separation, water make-up and water treatment facilities. The exact cooling-tower design and pump and piping capacities will be determined only after the requirements of all heat exchangersserved by the tower have been fixed. In preparing the estimates for this proposal, an average rise in the water temperature of 35° F with a 10° F approach to the wet bulb temperature (75° F) in the cooling tower has been assumed for approximately 21,000,000 Btu per minute (55,000,000 Btu/min future) of heat dissipation. This value of heat dissipation is based on an air consumption of 225 pounds per square inch (625 pounds per square inch future) for an air-fuel ratio of 14 to 1 giving a fuel quantity of 16 pounds per square inch. A cooling tower will be comprised of about 20 cells with a make-up water rate of about 3200 gallons per minute for the 225 pounds per second laboratory and about 70 cells with a make-up water rate of about 8600 gallons per minute for the 625 pounds per second laboratory. If larger temperature-rise values are practical, a smaller tower and circulation system may result due to the reduced water quantity required; if a smaller temperature rise is required, the opposite condition obtains. Detail analysis of equipment using cooling water will determine the best design of the cooling tower as a function of allowable temperature rise.

Controls, Intercommunications, Fire Protection, etc.:

Control and routing boards will be installed in a central location to control and show at any time the position of important valves on the principal process systems, such as combustion air, altitude exhaust, and process water. Controls for the starting of machinery will be placed near the machinery. Controls will also be provided for the cooling-tower water pumps as well as the air compressors and exhausters. The intercommunication system will include automatic telephones, emergency intercommunication system, and signal systems. A combustible-gas alarm system will be provided to warn of the accumulation of combustible gases which might cause damaging explosions. A carbon-dioxide fire-extinguishing system will be provided in the altitude chambers to extinguish any fires that may occur.

Research Equipment:

The research equipment for the Propulsion Sciences Laboratory will be two altitude chambers that will be included as a part of the initial construction program. These altitude chambers will be steel tanks approximately 15 feet in diameter and 230 feet in over-all length. The assembled length is determined by such included items as plenum chambers, test chambers, diffuser section, and coolers. The diffuser is needed to obtain maximum altitude and maximum weight flow conditions. Design and construction provision will be made to permit removal of tank outer and and various sections to accommodate changes as they are needed to suit conditions. Hatches will be provided to permit the installation of engines and research equipment. Balance and thrust-measuring equipment will be provided in the test chambers. Provision will be

made for research on turbo-propeller engines. Power will be absorbed by dynamometers installed either within or outside the altitude tanks. The chambers will not be housed except for the hatchway and control room. All piping and coolers will be outdoors.

A primary exhaust-gas cooler installation, possibly composed of two 60-pound coolers, will be installed. Inasmuch as these coolers are extremely expensive, it will be attempted in the detail design to make these coolers available to use by more than one altitude test tank. A secondary exhaust-gas cooler will also be installed. The duties for which these coolers will be designed will include the cooling of products of combustion from a stoichiometric mixture of air and fuel in a ratio of 14 to 1 at a temperature of 3500° F.

Building, Utilities, Roads, etc.:

The combustion air compressing and exhaust-gas exhausting equipment, with necessary gear boxes, electric motors, and controls, will be housed in an equipment building.

An office building will be provided (for research and other personnel needed to properly operate the test facility) inasmuch as there is no office building available at or near the proposed location. A steam heating plant also is necessary and will be provided.

At the altitude chambers, the access and work area will be housed to provide space for adjustments of models and installation work which does not warrant moving the model to an overhaul area of the laboratory.

Inasmuch as there are no utilities such as water, sewer, gas, roads, sidewalks, or communication in the proposed area, it will be necessary to construct these items as extensions of present systems.

CSM:ar
1/29/48

5 - 0

PROPULSION SCIENCES LABORATORY

Cost Itemization

(Combustion air — 225 lb/sec at 55 lb/sq in. abs;
altitude exhaust—100 lb/sec at 50,000 ft)

Based on J-33 Compressors as Compressors and Exhausters

Air System - Combustion air at rate of 225 pounds per second at 55 pounds per square inch absolute supplied from three J-33 compressors driven through gearing from 10,000-horsepower electric motors. Piping system, aftercoolers, and controls to be designed for handling capacities up to 625 pounds per second. $1,213,000

Refrigerated Air System - Owing to lack of funds, none will be provided initially. Plans will be made, however, for future air drying equipment and the generation of refrigerated air from the combustion air through air-expansion turbines.

Exhaust System - J-33 compressors will be used as gas exhausters in groups and staged to give an over-all pressure ratio of approximately 12.5 to 1. This item will include gears, motors, switchgear, intercoolers, piping and valves, and control and alarm system. 2,506,000

Power Supply - This item will include transformers, circuit breakers, buses and structure, metering protection equipment, foundation, and control house. The electrical equipment for the cooling-tower installation will also be included. 1,756,000

PROPULSION SCIENCES LABORATORY

Cost Itemization

(Combustion air -- 225 lb/sec at 55 lb/sq in. abs; altitude exhaust--100 lb/sec at 50,000 ft)

Based on J-33 Compressors as Compressors and Exhausters

Air System - Combustion air at rate of 225 pounds per second at 55 pounds per square inch absolute supplied from three J-33 compressors driven through gearing from 10,000-horsepower electric motors. Piping system, aftercoolers, and controls to be designed for handling capacities up to 625 pounds per second. $1,213,000

Refrigerated Air System - Owing to lack of funds, none will be provided initially. Plans will be made, however, for future air drying equipment and the generation of refrigerated air from the combustion air through air-expansion turbines.

Exhaust System - J-33 compressors will be used as gas exhausters in groups and staged to give an over-all pressure ratio of approximately 12.5 to 1. This item will include gears, motors, switchgear, intercoolers, piping and valves, and control and alarm system. 2,506,000

Power Supply - This item will include transformers, circuit breakers, buses and structure, metering protection equipment, foundation, and control house. The electrical equipment for the cooling-tower installation will also be included. 1,756,000

Process Water System - This item will include the cooling tower and distribution piping system. (Estimate is an average. Further analysis needed.)	760,000
Controls, Intercommunications, Fire Protection, etc. - This item will include controls for air compressors, exhausters, cooling tower, cooling-tower pumps, valves, telephone, emergency CO_2 system, and combustible-gas alarm system.	285,000
Research Equipment - There will be included primary exhaust-gas coolers, secondary exhaust-gas coolers, altitude test chambers, foundations, balances, instruments, fuel system, and control room with instrumentation.	1,510,000
Buildings, Utilities, and Roads - A machinery equipment building will be provided and also office building, access and work area at altitude test chambers, water, sewer, gas, and telephone extensions, heating plant, roads, and sidewalks.	2,448,000
	$10,478,000

CSM:cmd

1-29-48

of this continuous system capacity for Phase II. This increase is approximately 27 percent of the expanded continuous system capacity of the electric power company. Therefore, the electric power company should be asked as to their plans for expansion beyond 1952.

Power Cost:

It should be noted that at present rates the cost of power for operation of the Propulsion Sciences Laboratory at Cleveland is a considerable item. Based on the operating time and capacity proposed, the cost of power for the 88,000 kw of Phase I will increase the power bill by approximately $146,500 a month or $1,758,000 a year. For the 625-pound-per-second laboratory, the power bill would be increased by approximately $607,000 a month or $7,280,000 a year. Reduced rates should be possible.

Process Water System:

Large quantities of cooling water will be required to cool the exhaust gases before they can be handled by the exhausters, to cool the combustion air after compression, and to cool the exhaust gases before and after the compression stages of the exhausters, or to remove heat from various other auxiliary sources. Heat may be dissipated in a cooling tower and the water recirculated for reuse.

The process water system will consist of a cooling tower, water pumps, piping, sediment separation, water make-up and water treatment facilities. The exact cooling-tower design and pump and piping capacities will be determined only after the requirements of all heat exchangers served by the tower have been fixed. In preparing the

estimates for this proposal, an average rise in the water temperature of 35° F with a 10° F approach to the wet bulb temperature (75° F) in the cooling tower has been assumed for approximately 21,000,000 Btu per minute (55,000,000 Btu/min future) of heat dissipation. This value of heat dissipation is based on an air consumption of 225 pounds per second (625 pounds per second future) for an air-fuel ratio of 14 to 1 giving a fuel quantity of 16 pounds per second. A cooling tower will be comprised of about 20 cells with a make-up water rate of about 3200 gallons per minute for the 225 pounds per second laboratory and about 70 cells with a make-up water rate of about 8600 gallons per minute for the 625 pounds per second laboratory. If larger temperature-rise values are practical, a smaller tower and circulation system may result due to the reduced water quantity required; if a smaller temperature rise is required, the opposite condition obtains. Detail analysis of cooling water requirements will determine the best solution of this problem.

The previously stated water capacities are consistent with the quantities mentioned to the city in connection with our future needs.

Controls, Intercommunications, Fire Protection:

Control and routing boards will be installed in a central location to control and show at any time the position of important valves on the principal process systems, such as combustion air, altitude exhaust, and process water. Controls for the starting of machinery will be placed near the machinery. Controls will also be provided for the cooling-tower water pumps as well as the air compressors and exhausters.

The intercommunication system will include automatic telephones, emergency intercommunication system, and signal systems. A combustible-gas alarm system will be provided to warn of the accumulation of combustible gases which might cause damaging explosions. A carbon-dioxide fire-extinguishing system will be provided in the altitude chambers to extinguish any fires that may occur.

Research Equipment:

The research equipment for the Propulsion Sciences Laboratory will be two altitude chambers that will be included as a part of the initial construction program. These altitude chambers will be steel tanks approximately 20 feet in diameter and 230 feet in over-all length. The assembled length is determined by such included items as plenum chambers, test chambers, diffuser section, and coolers. The diffuser is needed to obtain maximum altitude and maximum weight flow conditions. Design and construction provision will be made to permit removal of tank outer end and various sections to accommodate changes as they are needed to suit conditions. Hatches will be provided to permit the installation of engines and research equipment. Balance and thrust-measuring equipment will be provided in the test chambers. Provision will be made for research on turbo-propeller engines. Power will be absorbed by dynamometers installed either within or outside the altitude tanks. The chambers will not be housed except for the hatch-way and control room. All piping and coolers will be outdoors.

A primary exhaust-gas cooler installation, possibly composed of two 60-pound coolers, will be installed. Inasmuch as these coolers

are extremely expensive, it will be attempted in the detail design to make these coolers available to use by more than one altitude test tank. A secondary exhaust-gas cooler will also be installed. The duties for which these coolers will be designed will include the cooling of products of combustion from a stoichiometric mixture of air and fuel in a ratio of 14 to 1 at a temperature of 3500° F.

Building, Utilities, Roads:

The combustion air compressing and exhaust-gas exhausting equipment, with necessary gear boxes, electric motors, and controls, will be housed in an equipment building.

An office building will be provided (for research and other personnel needed to properly operate the test facility) inasmuch as there is no office building available at or near the proposed location. A steam heating plant also is necessary and will be provided.

At the altitude chambers, the access and work area will be housed to provide space for adjustments of models and installation work which does not warrant moving the model to an overhaul area of the laboratory.

Inasmuch as there are no utilities such as water, sewer, gas, roads, sidewalks, or communication in the proposed area, it will be necessary to construct these items as extensions of present systems.

Plan of Procedure:

The recommended plan of procedure is to contract all possible design and construction service. An NACA project engineer will be appointed who will coordinate research requirements and feasibility with methods

of fulfillment. In general, this project engineer will seek to minimize the work to be done by NACA personnel and yet obtain the best possible job from a contractor. The project engineer will direct a small organization of experts (see Organization Chart) whose duty it will be to write performance specifications upon which design and construction contracts can be based. This group will consist of selected Cleveland laboratory research and service representatives who, in addition to preparing the performance specifications, will approve final plans, specifications and construction, according to laboratory standards, for structural, electrical, and mechanical engineering.

Project Itemization - Phase I:

The following itemization, involving three principal fields of specialization, is recommended to serve as a general guide.

1. Buildings and Utilities

   (a) Buildings, roads, sidewalks, and parking.
   (b) Heating and ventilating.
   (c) Sewer and water.

2. Electrical

   (a) Substations and distribution.
   (b) Motors and controls.
   (c) Lighting.
   (d) Communications.

3. Equipment, Piping Systems, and Controls

   (a) Equipment.

      (1) Combustion air compressors and coolers.
      (2) Exhausters and coolers.
      (3) Altitude tanks and engine mounts.
      (4) Cooling tower and pumps.
      (5) Fuel tanks and pumps.
      (6) CO_2 storage tank.
      (7) Service air compressor and cooler.
      (8) Acoustical mufflers (if required).

(b) Piping Systems.
  (1) Combustion air.
  (2) Exhaust gas.
  (3) Cooling Water.
  (4) Fuel.
  (5) CO_2 fire protection.
  (6) Service air.

(c) Controls.
  (1) Combustion air.
  (2) Exhaust gas.
  (3) Altitude tank.
  (4) Cooling water.
  (5) Fuel
  (6) CO_2.
  (7) Service air.

Construction Schedule:

	Start	Complete	Award
Design specifications for construction design, drafting and construction specifications	Immediately	June 15, 1948	
Contract for Architect-Engineer design services			July 1, 1948
Equipment contracts			July 1, 1948 through Sept. 1, 1948
General construction and process system construction contracts			Jan. 1, 1949 through June 30, 1949
Completion and Operation		July 1, 1950	

PROPULSION SCIENCES LABORATORY

Cost Itemization

(Combustion air -- 225 lb/sec at 55 lb/sq in. abs; altitude exhaust -- 100 lb/sec at 50,000 ft)

Based on J-33 Compressors as Compressors and Exhausters

Air System	- Combustion air at rate of 225 pounds per second at 55 pounds per square inch absolute supplied from three J-33 compressors driven through gearing from 10,000-horsepower electric motors. Piping system, aftercoolers, and controls to be designed for handling capacities up to 625 pounds per second.	$1,113,000
Exhaust System	- J-33 compressors will be used as gas exhausters in groups and staged to give an overall pressure ratio of approximately 12.5 to 1. This item will include gears, motors, switchgear, intercoolers, piping and valves, and control and alarm system.	2,408,000
Power Supply	- This item will include transformers, circuit breakers, buses and structure, metering protection equipment, foundation, and control house. The electrical equipment for the cooling-tower installation will also be included.	1,756,000

Process Water System - This item will include the cooling tower and distribution piping system. (Estimate is an average. Further analysis needed.)	760,000
Controls, Intercommunications, Fire Protection, etc. - This item will include controls for air compressors, exhausters, cooling tower, cooling-tower pumps, valves, telephone, emergency CO_2 system, and combustible-gas alarm system.	285,000
Research Equipment - There will be included primary exhaust-gas coolers, secondary exhaust-gas coolers, altitude test chambers, foundations, balances, instruments, fuel system, and control room with instrumentation.	1,312,000
Buildings, Utilities, and Roads - A machinery equipment building will be provided and also office building, access and work area at altitude test chambers, water, sewer, gas, and telephone extensions, heating plant, roads, and sidewalks.	2,366,000
	$10,000,000

CSM:at

1/21/48

Revised 3/15/48

.ist

APPENDIX B

Subject: Probable Electric Power Requirements of the Flight Propulsion Research Laboratory

Reference: (a) Report entitled "Comparison of Steam and Electric Drive for Research Facilities", by Allan H. Heidenreich.
(b) Appendix A.

1. A summary of probable (1951) electrical loads at the Flight Propulsion Research Laboratory are as follows:

Altitude Wind Tunnel	40,000 KW	
Engine Research Building	28,500	
8' x 6' Supersonic Tunnel	90,000	
8' x 8' Supersonic Tunnel		
Drive	150,000	
Auxiliary	33,000	
Propulsion Sciences Bldg.	88,000	(expansion may increase this to approximately 201,000)

2. The total power required for compressing 240 pounds of air per second to 55 pounds per square inch absolute with the converted J-33 compressor, when a compressor efficiency of 66 percent is used, is 30,000 horsepower. The maximum power required by each exhauster evacuating at a constant inlet volume is 5100 horsepower at a compression ratio of about 3.75, or a total for the 13 exhausters of 66,300 horsepower. To these power requirements 20,000 horsepower may be added for auxiliary equipment, including the cooling-water system. The total installed power requirement for the initial installation, therefore, is 116,300 horsepower or about 88,000 kw.

3. The proposed Propulsion Sciences Laboratory will require practically duplicating Substation A by the addition of 120,000 kva of 132,000 to 34,500-volt transformation and switching equipment at Substation A. This addition is based on two new 132-kv incoming lines with 65,000 kva of transformer capacity for each line. With these added lines (two) the off-peak demand may be 262,000 kva.

4. It appears that with the Propulsion Sciences Building and two altitude chambers, the off-peak research time of 7-8 hours per 24 would have to be shared by five research facilities. The location of all of these research facilities at the Flight Propulsion Research Laboratory, Cleveland, Ohio, would certainly result in a low use factor being obtained for any one of these research facilities.

Allan H. Heindenreich

Allan H. Heindenreich

AHH:at

1/21/48

Revised
3/15/48
RSP

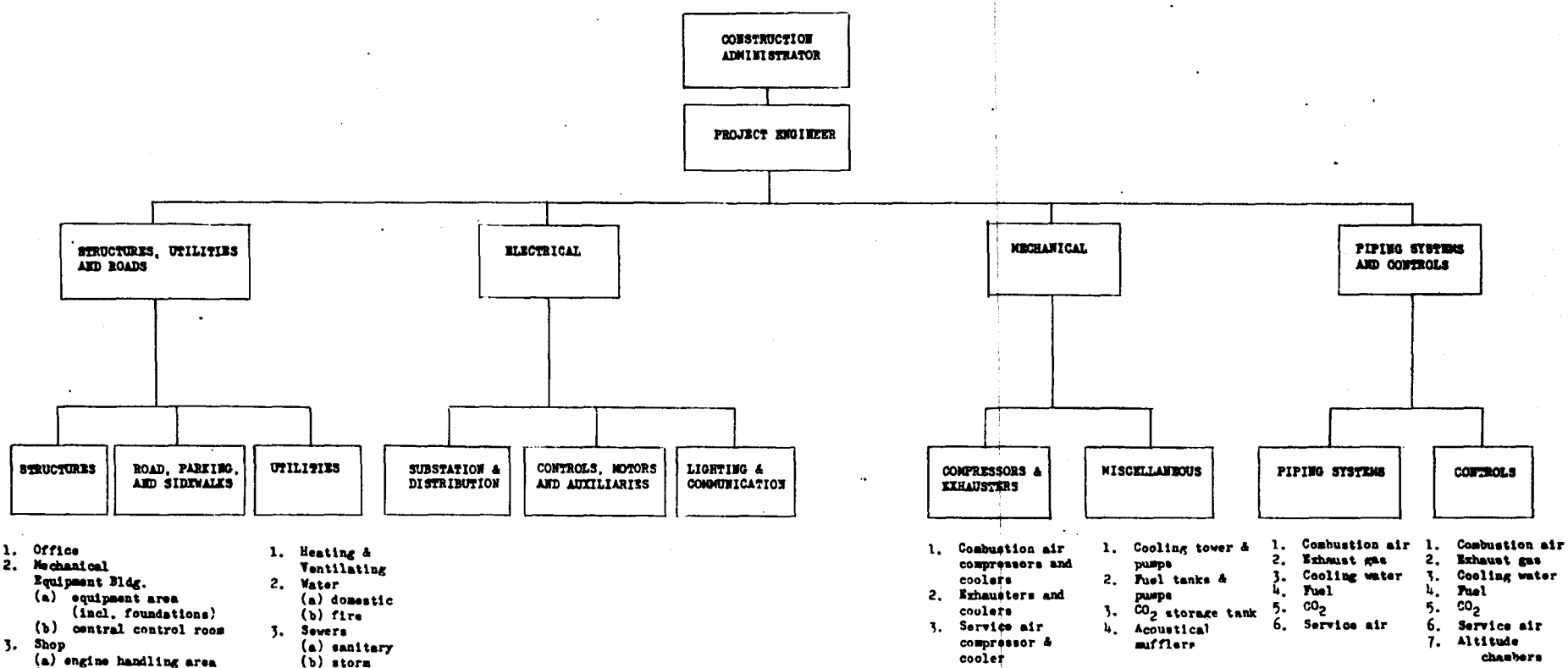

1. Office
2. Mechanical Equipment Bldg.
   (a) equipment area (incl. foundations)
   (b) central control room
3. Shop
   (a) engine handling area
   (b) research control rooms
4. Altitude Chambers (including engine mounts)

1. Heating & Ventilating
2. Water
   (a) domestic
   (b) fire
3. Sewers
   (a) sanitary
   (b) storm

1. Combustion air compressors and coolers
2. Exhausters and coolers
3. Service air compressor & cooler

1. Cooling tower & pumps
2. Fuel tanks & pumps
3. CO_2 storage tank
4. Acoustical mufflers

1. Combustion air
2. Exhaust gas
3. Cooling water
4. Fuel
5. CO_2
6. Service air

1. Combustion air
2. Exhaust gas
3. Cooling water
4. Fuel
5. CO_2
6. Service air
7. Altitude chambers

PROPULSION SCIENCES LABORATORY ORGANIZATION CHART

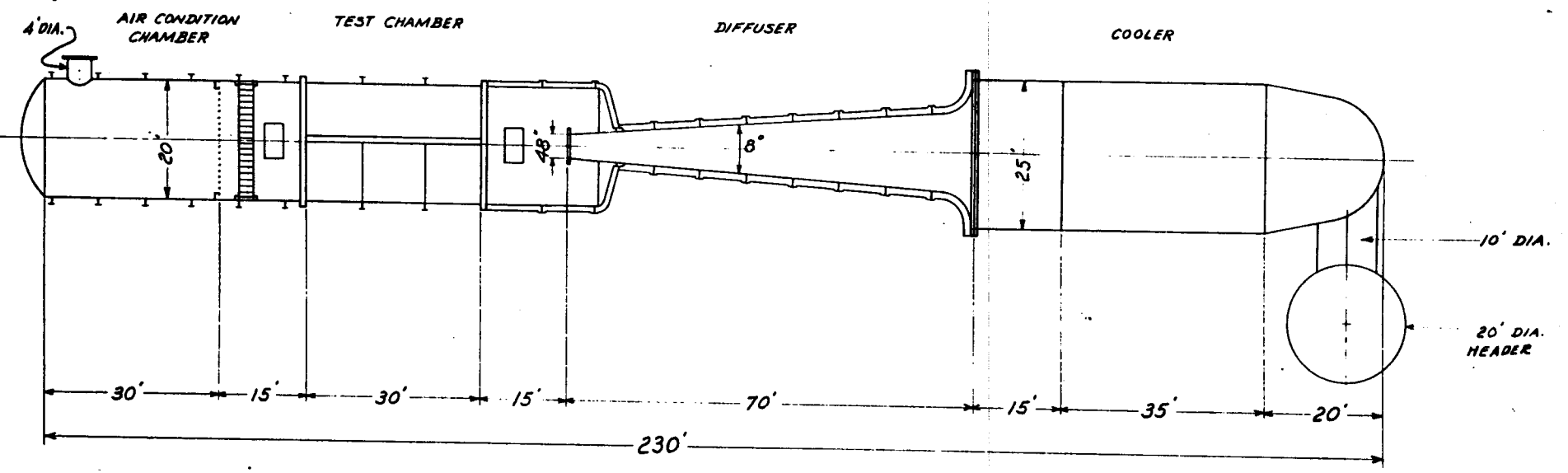

ELEVATION

FIG. 1

PROPOSED ALTITUDE CHAMBER

DR. : F.J. GUSIK 1-30-48

SCALE : $\frac{1}{16}$" = 1'-0"

J.O. # T-210

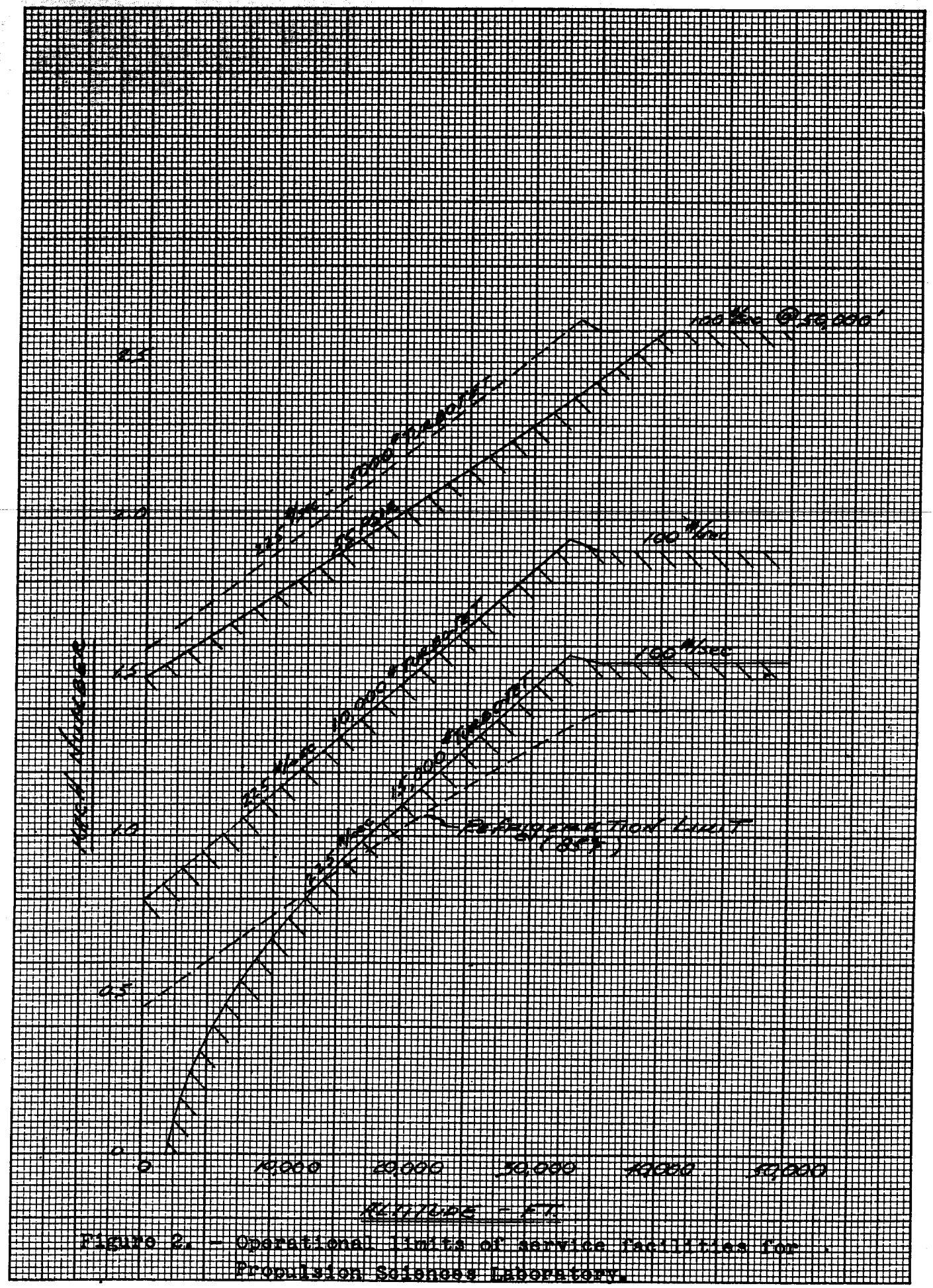

Figure 2. - Operational limits of service facilities for Propulsion Solenoids Laboratory.

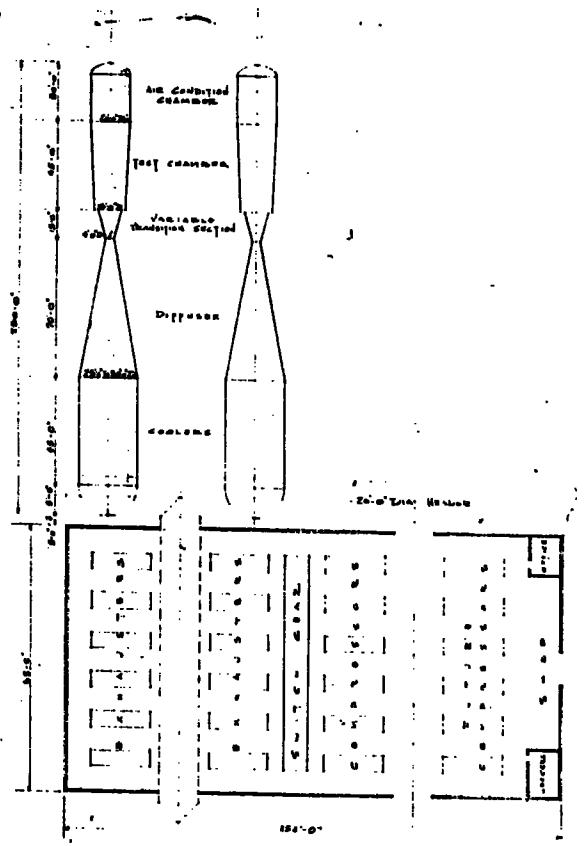

FIRST FLOOR PLAN

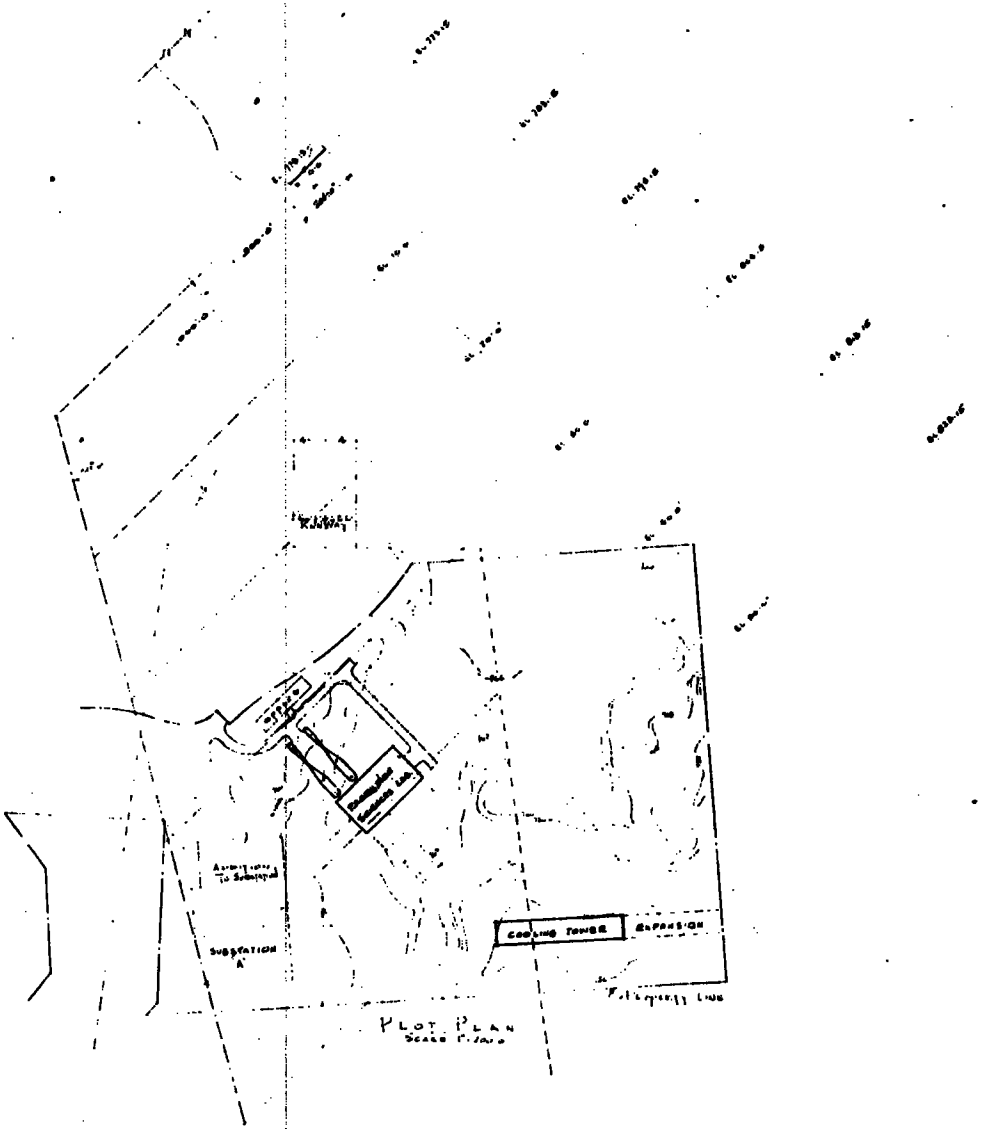

PLOT PLAN

PROPULSION SCIENCES LABORATORY