GLENN EXTREME ENVIRONMENT RIG | GEER

National Aeronautics and Space Administration

USING THE GLENN EXTREME ENVIRONMENTS RIG (GEER) FOR VENUS RESEARCH

DAN VENTO[1] | TIBOR KREMIC[1] | LEAH M. NAKLEY[2]
[1]NASA GLENN RESEARCH CENTER | [2]SIERRA LOBO, INC.

GEER for Venus Applications

The Glenn Extreme Environments Rig can simulate many planetary environments including high temperature, high pressure and multicomponent chemistry. In the Venus configuration GEER can reproduce conditions in the atmosphere from the surface of the planet to about 75 km. The quantity and type of the component gasses are customizable to fit the needs of any user. Up to eight component gases plus water can be combined and used in the chamber. Specific gas quantities can be very accurately controlled down to parts per million accuracy depending on the gas. Available gases for Venus include CO_2, N_2, COS, H_2S, SO_2, HF, HCL, NO, and CO. Water may be added in small quantities.

Operational History

The Glenn Extreme Environments Rig successfully demonstrated the ability to reach and operate at Venus surface conditions for 24 days in November 2014. A custom gas mixer was used create the Venusian atmosphere containing 96.5% CO_2, 3.5% N_2, 180 ppm SO_2, 23 ppm CO, 0.4 ppm HCl, 0.05 ppm HF, 4.4 ppm OCS and deliver it to the vessel. After 2.5 days of heating at 7C/hr, the vessel reached Venus surface conditions of 460C and 1334 psia while maintaining a leak free seal. The system boundaries were tested by increasing temperature and pressure to 470 C and 1400 psia where the vessel remaining for 24 days. Over this period of time, the heaters and setpoints were varied to gain operational experience and knowledge of the system. The gas composition was verified before and after the test by Gas Chromatography/Mass Spectrometry (GC/MS).

Facility Details

- 3 ft diameter and 4 ft long
- Automated gas delivery
- Custom gas mixer (eight gas streams)
- Gas analyzer (Fourier Transform Infrared (FTIR) spectrometer)
- Programmable logic controller
- Touchscreen interface

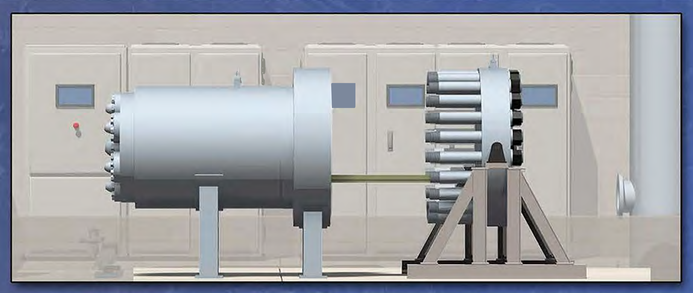

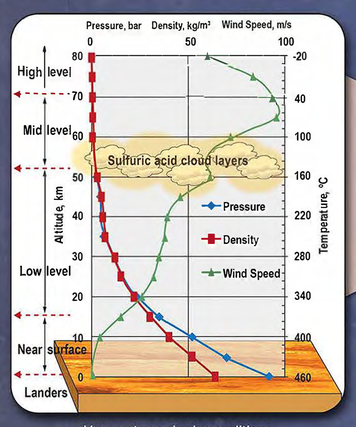

Venus atmospheric conditions

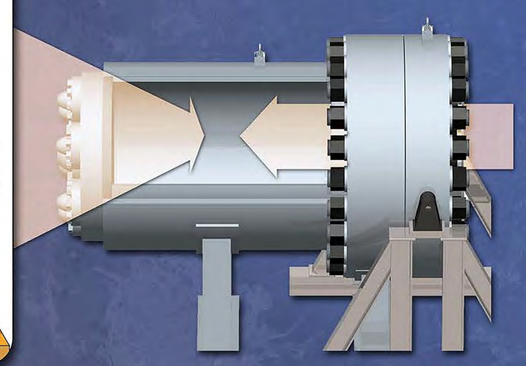

Venus Surface Conditions

- High temperature
  - 1000 °F (500 °C)
- High pressure
  - 1500 psig (100 bar)
- Trace Gases
  - CO_2 (~96.5%)
  - SO_2 (130 ppm)
  - HF (5 ppb)
  - HCl (0.5 ppm)
  - NO (5.5 ppb)
  - CO (15 ppm)
  - COS (27 ppm)
  - N_2 (~3.4%)
  - H_2O (30 ppm)

GEER Capability Summary

User Accommodations

Currently GEER has a Unistrut rail mounting system for user hardware. The rail is mounted axially down the middle of the chamber. Test hardware may be positioned anywhere along the rail. GEER can be customized to the needs of the user. It is possible to add additional support platforms, viewing ports, electrical feed throughs and AC or DC power. In addition, a multichannel high-speed data system is available for use by GEER customers.

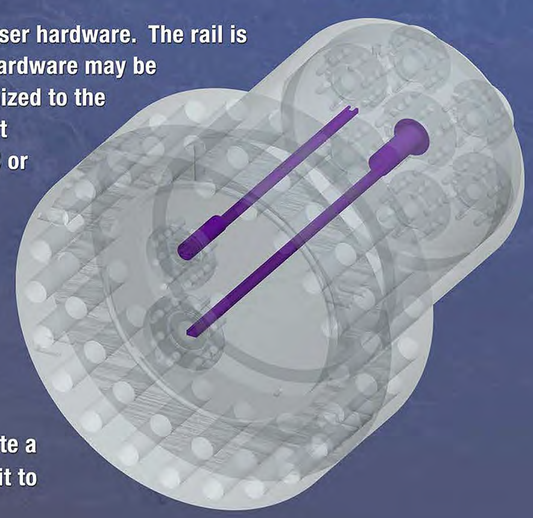

Planned Enhancements

GEER will be adding viewing ports, advanced real time gas analytics, and a high speed data system over the next few months. In addition, GEER is planning to add cooling capability and a separate chamber for acidic clouds. A long term goal for GEER is to be able to simulate a dynamic environment such as a descent profile from orbit to the surface.

GEER First Run

Early Test Results

- Completed first round of GEER check out testing
  - Included 24 days at Venus condition
    - 460 deg C or above
    - 1384 psi or above
  - Gas mixture based on Grinspoon's *Venus Revealed* data
  - 14 days at 500 deg C and 1400 psi

Atmosphere Mixture for First Run

Gas	Moles	Grams
CO_2	1237.1107	54445.24191
N_2	44.8693	1256.96857
SO_2	0.2307564	14.78225498
HCl	0.000512792	0.018695371
HF	0.000064099	0.001282365
OCS	0.005640712	0.338843211
CO	0.02948554	0.825919461
H_2O	0.0384594	0.69288455

Data from First Run

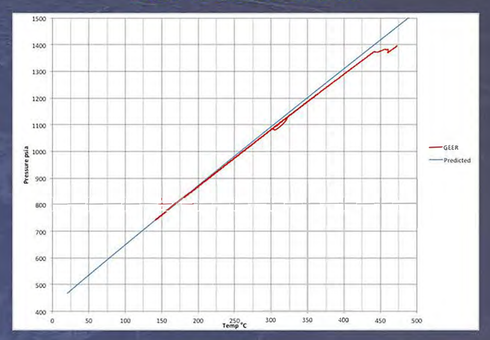

Blue line is predicted behavior. Red line is actual data. The pressure anomaly at 437 C and 130 psi is very intriguing. Testing to date suggests data is a real condition and not instrumentation anomaly.

Process Startup Details

- System starts at ambient temperature and vacuum pressure
- Component gasses are blended using gas mixer
- Vessel is then filled with correct blend up to 500 psig (at ambient temperature)
- Heat is applied and controlled to bring system to steady-state operating point (1350 psig, 932 °F)
- If necessary, chemicals may be "topped-off" using gas booster

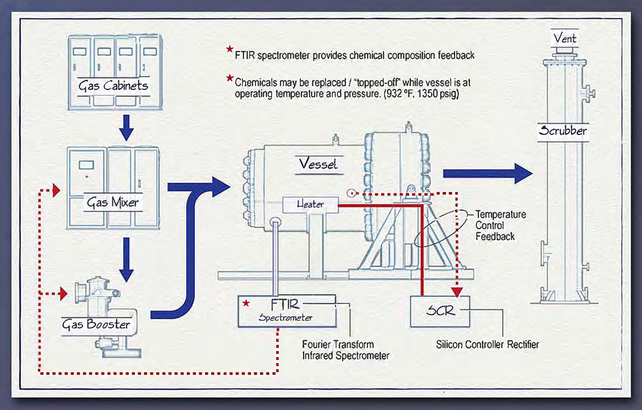

REFERENCES

1. Dyson, Rodger and Johnson, Natasha "Venus Environmental Test Facility Capability List," March, 2012. http://www.lpi.usra.edu/vexag/VenusEnvironmentTestFacilitiesRelease.pdf

Daniel M. Vento
SPACE SCIENCE PROJECT OFFICE
NASA Glenn Research Center
Daniel.M.Vento@nasa.gov
(216) 433-2834
http://spaceflightsystems.grc.nasa.gov/SSPO/SS/Extreme