TABATA

PWA FR-1769

28 FEBRUARY 1966

DESIGN REPORT
FOR
RL10A-3-3 ROCKET ENGINE

CONTRACT NO. NAS8-15494

GPO PRICE $ _____

CFSTI PRICE(S) $ _____

Hard copy (HC) 5.00

Microfiche (MF) .75

ff 653 July 65

N67 14800 (ACCESSION NUMBER)

75 (PAGES)

CR-86920 (NASA CR OR TMX OR AD NUMBER)

(THRU)

1 (CODE)

28 (CATEGORY)

FACILITY FORM 602

Pratt & Whitney Aircraft DIVISION OF UNITED AIRCRAFT CORPORATION

FLORIDA RESEARCH AND DEVELOPMENT CENTER

PWA FR-1769

28 FEBRUARY 1966

DESIGN REPORT
FOR
RL10A-3-3 ROCKET ENGINE

CONTRACT NO. NAS8-15494

Approved by:

R. H. Anschutz
Program Manager

Pratt & Whitney Aircraft DIVISION OF UNITED AIRCRAFT CORPORATION
FLORIDA RESEARCH AND DEVELOPMENT CENTER

FOREWORD

This report describes the RL10A-3-3 Rocket Engine, and is submitted in compliance with the requirements of Contract NAS8-15494, Exhibit A, Item 6, paragraph G.

CONTENTS

SECTION		PAGE
	ILLUSTRATIONS	v
	PREFACE	viii
	INTRODUCTION	ix
I	COMPONENT DESIGN ANALYSIS	I-1
	A. Propellant Control System	I-1
	B. Turbopump Assembly	I-9
	C. Accessory Drive Pad	I-17
	D. Gearbox Vent Orifice	I-17
	E. Thrust Chamber	I-17
	F. Propellant Injector	I-19
	G. Propellant Piping	I-20
	H. Engine Plumbing	I-20
	I. Engine Mount System	I-21
	J. Electrical Requirements	I-22
	K. Ignition System	I-22
II	INSTALLATION DRAWING	II-1
III	ASSEMBLY DRAWING	III-1
IV	WEIGHT BREAKDOWN	IV-1
V	ANALYSIS OF STEADY-STATE AND TRANSIENT PERFORMANCE	V-1
	A. Steady-State Performance	V-1
	B. Transient Performance	V-4
	C. Sequence of Engine Operation	V-4
VI	SCHEMATIC DRAWING	VI-1
VII	MATERIALS GLOSSARY	VII-1
VIII	ENGINE PARTS LIST	VIII-1
IX	PROPELLANTS AND ANCILLARY FLUIDS PRESSURE AND TEMPERATURE REQUIREMENTS	IX-1
X	MALFUNCTION ANALYSIS	X-1
	A. General	X-1
	B. Results - Malfunctions Required by Model Specification 2265A	X-2
	C. Results - Malfunctions Not Required by Model Specification 2265A	X-5

CONTENTS (Continued)

SECTION		PAGE
	APPENDIX A - Stress Data.	A-1
	APPENDIX B - RL10A-3-3 Turbopump Data	B-1
	APPENDIX C - RL10A-3-3 Thrust Control Analysis. . .	C-1
	APPENDIX D - Combustion and Flow Data	D-1
	APPENDIX E - Inlet Valve Specifications	E-1

ILLUSTRATIONS

FIGURE		PAGE
I-1	Propellant Pump Inlet Shutoff Valve Schematic	I-1
I-2	Fuel Pump Cooldown, Bleed, and Pressure Relief Valve Schematic	I-2
I-3	Solenoid Valve Schematic	I-4
I-4	Main Fuel Shutoff Valve Schematic	I-5
I-5	Oxidizer Flow Control and Purge Check Valve Schematic	I-6
I-6	Thrust Control	I-7
I-7	Prelaunch Cooldown Check Valve	I-8
I-8	Igniter Oxidizer Supply Valve Schematic	I-9
I-9	Turbopump Assembly	I-10
I-10	Bearing Coolant Schematic	I-11
I-11	Fuel Pump Interstage Seal	I-13
I-12	Fuel Pump Face Seal	I-13
I-13	Turbine Rotor Seal	I-13
I-14	Oxidizer Pump Seal	I-14
I-15	Accessory Drive Pad Seal	I-14
I-16	Turbine Rotor with Shroud	I-16
I-17	Full-Length, Double-Tapered Tube; and Short, Single-Tapered Tube	I-18
I-18	Propellant Injector	I-19
I-19	Propellant Pipe Sealing Method	I-21
I-20	Small Line Sealing Method	I-21
I-21	Gimbal Assembly	I-22
I-22	Igniter Assembly	I-23
I-23	Ignition System Schematic	I-24
II-1	RL10A-3-3 Engine Installation	II-2
III-1	RL10A-3-3 Engine Assembly	III-2
V-1	Estimated Starting Transient Showing 3σ Deviation Envelope	V-5
V-2	Estimated Effects of Initial Thrust Chamber Wall Temperatures	V-6

ILLUSTRATIONS (Continued)

FIGURE		PAGE
V-3	Estimated Shutdown Transient Thrust vs Time	V-7
V-4	Design Sequence of Engine Operation for RL10A-3-3 Engine	V-8
VI-1	Propellant Flow Schematic for RL10A-3-3 Engine	VI-2
IX-1	Estimated Liquid Hydrogen Conditions Required at Fuel Pump Inlet	IX-2
IX-2	Estimated Liquid Oxygen Conditions Required at Oxidizer Pump Inlet	IX-3
A-1	Calculated RL10A-3-3 Thrust Chamber Stresses	A-2
A-2	Calculated First-Stage Fuel Pump Impeller Stresses (Front Face)	A-3
A-3	Calculated First-Stage Fuel Pump Impeller Stresses (Back Face)	A-4
A-4	Calculated Second-Stage Fuel Pump Impeller Stresses (Front Face)	A-5
A-5	Calculated Second-Stage Fuel Pump Impeller Stresses (Back Face)	A-6
A-6	Turbine Rotor Stresses Calculated at 33,020 rpm, Maximum Steady-State Operation	A-7
B-1	RL10A-3-3 Fuel Pump Predicted Performance	B-2
B-2	RL10A-3-3 Fuel Pump Predicted Pressure at 30,250 rpm	B-3
B-3	RL10A-3-3 Oxidizer Pump Predicted Performance	B-4
B-4	RL10A-3-3 Oxidizer Pump Predicted Pressure at 12,100 rpm	B-5
B-5	RL10A-3-3 Predicted Turbine Efficiency	B-6
C-1	Control System Simplified Block Diagram	C-1
C-2	Linearized Block Diagram of Engine	C-2
C-3	Linearized Block Diagram of Thrust Control	C-2
C-4	Fast Loop Isolated from Engine	C-3
C-5	Typical Bode Diagram for Fast Loop	C-3
C-6	Open Loop Response of Engine Plus Control (Bode Diagram)	C-5
C-7	Open Loop Response of Engine Plus Control (Nyquist Diagram)	C-5

ILLUSTRATIONS (Continued)

FIGURE		PAGE
D-1	Predicted Torque vs Percent Design Chamber Pressure.	D-2
D-2	Estimated Effect of Mixture Ratio on Thrust and Specific Impulse	D-3
D-3	Calculated Thrust Chamber Tube Temperature and Pressure.	D-4
D-4	Temperature vs Flow Through Injector Face	D-5

PREFACE

This report describes the design features of the RL10A-3-3 rocket engine. The following sections are included in this report in accordance with the requirements of Contract NAS8-15494, Exhibit A, Item 6, paragraph G.

I.	Component design analysis
II.	Installation drawing
III.	Assembly drawing
IV.	Weight breakdown
V.	Analysis of steady-state and transient performance
VI.	Schematic drawing
VII.	Materials glossary
VIII.	Engine parts list
IX.	Propellants and ancillary fluids pressure and temperature requirements
X.	Malfunction analysis

The engine configuration described herein incorporates design changes through 31 January 1966.

INTRODUCTION

The RL10A-3-3 rocket engine is a regeneratively cooled, turbopump-fed engine with a single chamber and a rated thrust of 15,000 lb at an altitude of 200,000 ft, and a nominal specific impulse of 444 sec. Propellants are liquid oxygen and liquid hydrogen injected at a nominal oxidizer-to-fuel mixture ratio of 5.0:1. Rated engine thrust is achieved at a nominal design chamber pressure of 400 psia with a nominal nozzle area ratio of 57:1. The engine can be used for multiengine installations on an interchangeable basis. The engine will be capable of making at least three starts during a single mission with a nominal running time of 450 sec during a single firing. The service life of the engine shall be an accumulated running time of 4000 sec. Nonfiring functional checks of the complete engine system shall not exceed 500 cycles or 30 turbopump rotating tests. Components having a service life in excess of 500 cycles shall be listed in the Service Manual.

SECTION I
COMPONENT DESIGN ANALYSIS

A. PROPELLANT CONTROL SYSTEM

The RL10A-3-3 propellant control system consists of the following components: fuel pump inlet shutoff valve, oxidizer pump inlet shutoff valve, oxidizer flow control valve, prelaunch cooldown and check valve, fuel pump cooldown and bleed valves (interstage and discharge), thrust control, main fuel shutoff valve, prestart and start solenoid valves, igniter oxidizer supply valve, and igniter. A schematic of the propellant system is shown in Section VI, figure VI-1.

1. Propellant Inlet Shutoff Valves

The fuel and oxidizer inlet shutoff valves (figure I-1) are normally closed, helium-operated, bellows-actuated, two-position ball valves.

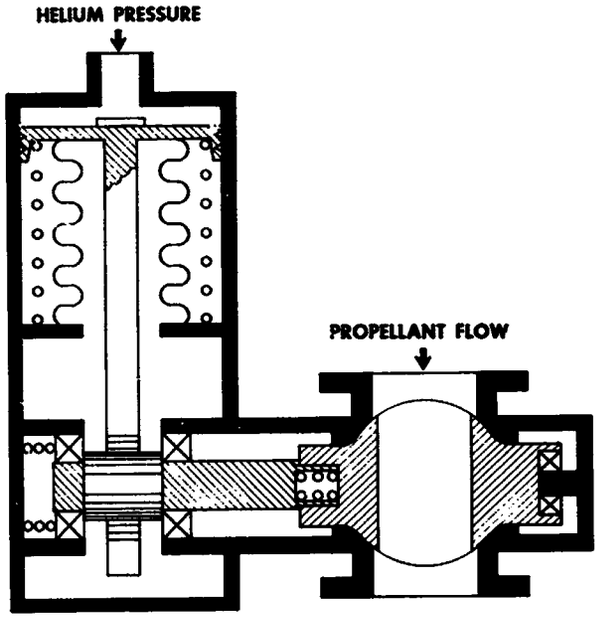

Figure I-1. Propellant Pump Inlet Shutoff Valve Schematic FD 3145

The valves provide a seal between the vehicle propellant tanks and the engine pumps when the engine is not in operation, and allow propellants to flow from the vehicle propellant tanks into the engine pumps during engine prestart, engine start, and engine steady-state operation.

Each valve is actuated open by helium pressure at engine prestart. The ball valve is actuated by means of a rack and pinion mechanism attached to

the bellows. Propellant flows through the open ball valve to the engine pump until engine shutdown. Venting the helium at engine shutdown allows the ball valve to close.

For valve data see Appendix E.

2. Fuel Pump Cooldown and Bleed Valves

a. Fuel Pump Interstage Cooldown, Bleed, and Pressure Relief Valve

The fuel pump interstage cooldown, bleed, and pressure relief valve is a pressure-operated, three-position, normally open sleeve valve. (See figure I-2.)

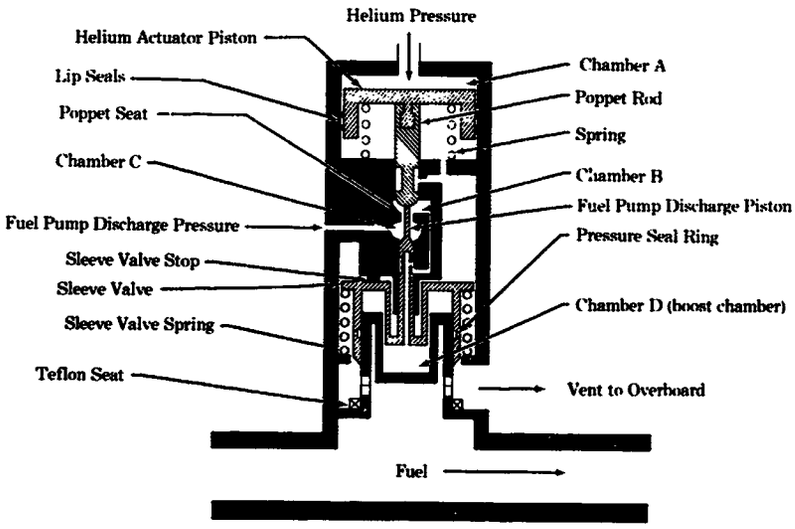

Figure I-2. Fuel Pump Cooldown, Bleed, and Pressure Relief Valve Schematic FD 2666C

The purposes of the valve are as follows:

1. Allow overboard ventage of coolant (or fluid) for fuel pump cool-down during engine prechill and prestart

2. Provide first-stage fuel pump bleed control during the engine start transient

3. Provide fuel system pressure relief during engine shutdown.

During engine prechill and prestart, the cooldown flow is allowed to vent overboard through the normally open vent ports of the valve.

After the prestart period, chamber A is pressurized with helium, causing the helium actuator piston to move the fuel pump discharge piston and sleeve valve. The sleeve valve travels to a position that partially covers

the vent ports, reducing their total area by approximately 40%. The remaining vent port area provides the amount of first-stage fuel pump bleed required to prevent low-speed pump stall or unstable acceleration of the engine. This initial movement of the helium actuator piston also serves to seat the poppet rod against the poppet seat. This provides venting for chamber B and chamber D via internal passages, and allows fuel pump discharge pressure to build up in chamber C against the fuel pump discharge piston.

As the engine accelerates in the early part of the start transient, the fuel pump discharge piston moves the sleeve valve to fully close the vent ports, thus terminating fuel pump bleed. Increasing fuel pump discharge pressure forces the sleeve valve against the Teflon seat and provides a positive seal during steady-state engine operation.

During the engine shutdown transient, the sleeve valve opens rapidly to prevent excessive fuel system pressure when the main fuel shutoff valve closes. As the helium pressure is vented from chamber A at shutdown, the poppet rod is lifted off the poppet seat and blocks the vent to chamber B. Fuel pump discharge pressure enters chamber D through chamber B and the internal connection. This pressure "boosts" the sleeve valve open rapidly, thereby providing fuel system pressure relief.

b. Fuel Pump Discharge Cooldown and Pressure Relief Valve

The fuel pump discharge cooldown and pressure relief valve is a pressure-operated, two-position, normally open sleeve valve. (See figure I-2.)

The purposes of the valve are as follows:

1. Allow overboard ventage of fluids used for fuel pump cooldown during engine prechill and prestart

2. Provide fuel system pressure relief during engine shutdown.

The operation of this valve is the same as that of the interstage cooldown valve, except there is no fuel pump bleed function. The sleeve valve fully closes the vent ports in one step upon pressurization of chamber A at the start signal.

The internal sealing, venting, and boosting features are identical to those in the interstage valve.

3. Prestart and Start Solenoid Valves

The prestart and start solenoid valves (figure I-3) are solenoid-actuated, direct-acting, 3-way valves with double-ended poppets.

The prestart solenoid valve controls the actuator helium supply to the propellant inlet shutoff valves, and the start solenoid valve controls the actuator helium supply to the main fuel shutoff valve and the two fuel pump cooldown valves. The two solenoid valves are identical in design and function.

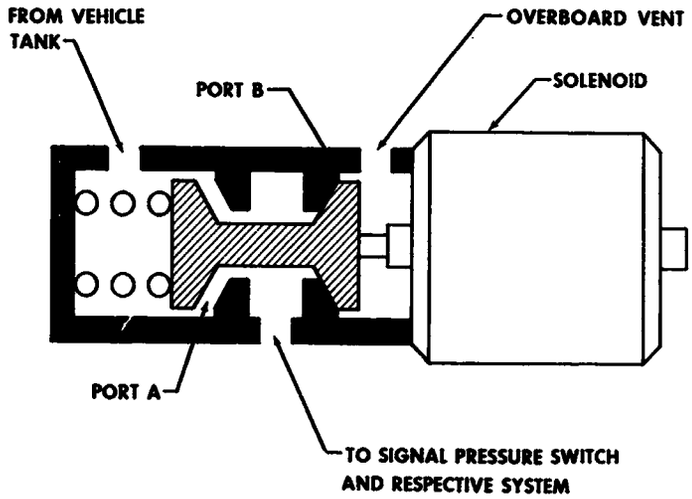

Figure I-3. Solenoid Valve Schematic FD 4444

In the de-energized position, valve port A is closed and valve port B is open to ambient vent. The poppet is positioned by the valve spring force on the poppet valve body. At either the prestart or start signal, the respective solenoid valve is energized by dc electrical supply from the vehicle. The plunger rod moves the poppet valve, opening port A and closing port B. Helium flows through port A into the helium supply system for the control valve actuators. The solenoid is de-energized at engine shutdown and the spring returns the poppet valve to its original position, closing port A and opening port B, through which the helium in the engine valve system is vented overboard.

A pressure switch is mounted on the solenoid valve to indicate when the engine valve actuator supply pressure is within a preset level.

The positive ground wire provided for each solenoid valve housing reduces the level of radio interference.

4. Main Fuel Shutoff Valve

The main fuel shutoff valve (figure I-4) is a helium-operated, two-position, normally closed, bullet-type annular gate valve.

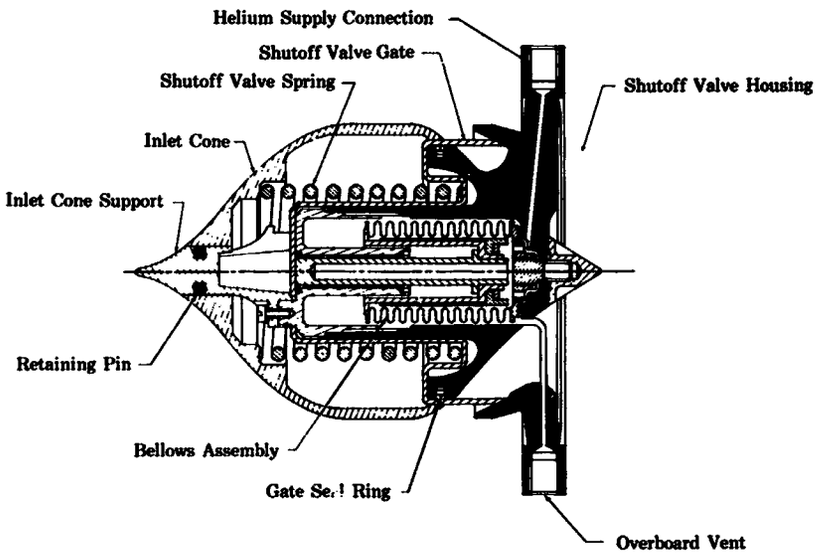

Figure I-4. Main Fuel Shutoff Valve Schematic FD 1551D

The valve serves to prevent fuel flow into the combustion chamber during the cooldown period and provides a rapid cutoff of fuel flow to the combustion chamber at engine shutdown.

At the engine start signal, the shutoff valve gate is opened by helium pressurization of the bellows assembly. Fuel flows through the shutoff valve housing to the propellant injector. The compressed shutoff valve spring returns the gate to its normally closed position when helium pressure is vented at engine shutdown. Sealing is accomplished by the seating of the spherical surface of the gate against a conical surface on the valve housing and by the gate seal ring.

External pressurization of the helium bellows by either fuel or helium seal leakage is prevented by venting the bellows cavity to ambient pressure through a nonpropulsive vent.

5. Oxidizer Flow Control and Purge Check Valve

The oxidizer flow control and purge check valve (figure I-5) is a normally closed, variable-position valve. The valve controls oxidizer pump cooldown flow during the engine prestart cycle, controls oxidizer flow during the engine start transient, provides for ground trim of the

propellant mixture ratio, and provides for in-flight oxidizer propellant utilization control.

The oxidizer flow control and purge check valve consists of a prestart oxidizer flow section, an oxidizer flow control valve, a propellant utilization valve, and a purge check valve.

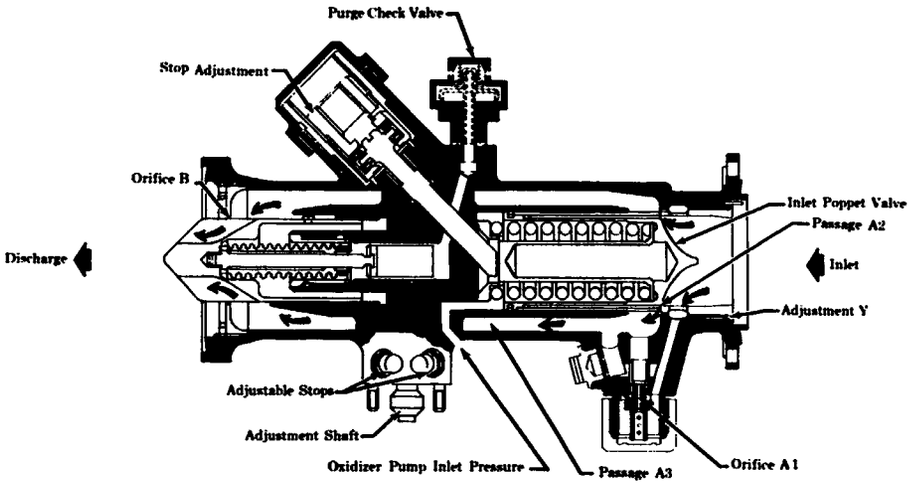

Figure I-5. Oxidizer Flow Control and Purge Check Valve Schematic FD 2200E

During engine cooldown and the early part of the start sequence, the inlet poppet valve is held closed by a spring. Oxidizer entering the inlet of the control takes one of three routes. Part of the oxidizer flows through holes in the adjustment sleeve and either through orifice A1 and into passage A3 or through slots in the outside diameter of the adjustment sleeve and directly into passage A3. The rest of the oxidizer flows through the inlet poppet valve passage A2 into passage A3. These routings provide oxidizer pump and valve cooldown flow during prestart as well as the oxidizer flow required for ignition and the portion of the start transient prior to opening of the poppet valve.

The inlet poppet valve opens during engine acceleration. The opening point is controlled by the increasing oxidizer pump discharge to pump inlet pressure differential which is opposed by the preset spring load. During engine ground trim, the inlet valve full-open position is regulated by remotely setting the stop adjustment.

Orifice B is provided for vehicle propellant utilization and is varied by the position of the discharge pintle. The pintle is actuated by a shaft which is sealed by a bellows assembly and actuated by a rack and pinion. The pinion shaft incorporates stops to limit shaft rotation and engine mixture ratio within allowable limits.

A normally closed ground purge check valve is provided for the rack and pinion cavity to maintain a positive cavity purge pressure and keep ambient atmospheric moisture out of the cavity. The purge check valve is actuated by purge pressure entering through a passage in the check valve stem. The check valve poppet is lifted and the purge is vented through a nonpropulsive vent. The spring returns the check valve to the closed position at purge termination.

6. Thrust Control Valve

The thrust control (figure I-6) is a normally closed, servo-operated, closed-loop, variable-position bypass valve used to control engine thrust by regulation of turbine power. Control of engine thrust is provided by the combustion chamber pressure acting through the motor bellows and spring carrier against a reference spring load and reference bellows pressure load to actuate a servolever that exposes a shear orifice. Exposure of the shear orifice bleeds servochamber pressure, which is supplied from venturi upstream pressure. The bypass valve position is controlled by the relationship between servochamber pressure and spring load as opposed to turbine discharge pressure. The bypass valve position feedback signal is mechanically transmitted through the feedback spring carrier and spring to the servolever. As combustion chamber pressure varies from the desired value, the action of the control allows the turbine bypass valve to vary the fuel flow through the turbine. This in turn regulates turbine power and combustion chamber pressure.

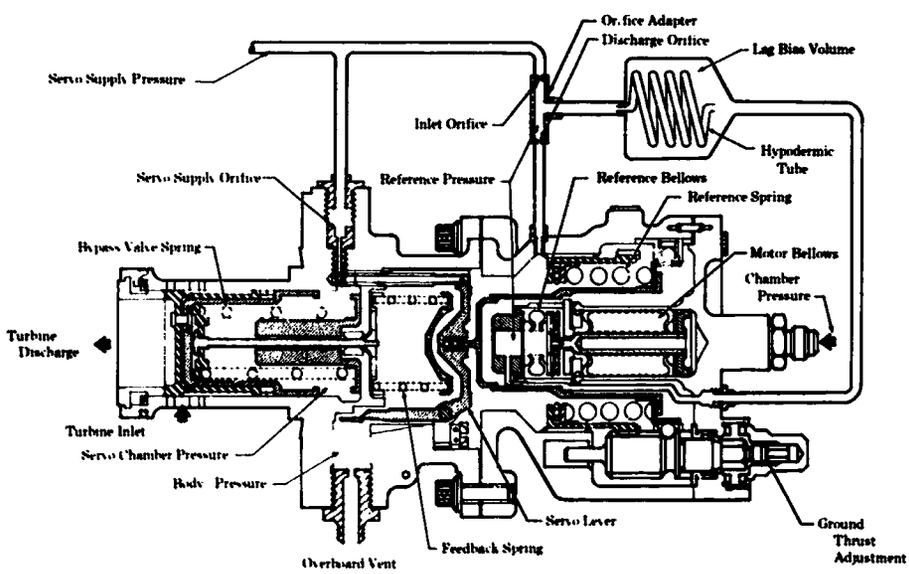

Figure I-6. Thrust Control FD 10744

A secondary function of the control is to limit engine thrust overshoot during the start transient. This is accomplished through a reference bellows pressure lag system that prevents that pressure from rising at the same rate as combustion chamber pressure. This allows the control bypass valve to open early in the start transient and reduces turbine power prior to attainment of steady-state chamber pressure.

Thrust drift during the early portion of steady-state engine operation prior to the time when thrust control component parts have reached stable temperature is limited by an orifice system that provides a relatively constant reference bellows pressure supply. The relatively small heat sink of the orifice block allows it to reach equilibrium temperature rapidly. Thrust control ground trim is accomplished through adjustment of the reference spring load during engine acceptance testing.

7. Prelaunch Cooldown Check Valve

The prelaunch cooldown check valve (figure I-7) is a normally closed, spring-loaded valve that allows partial cooling of the turbopump prior to launch. Cold helium under pressure entering the valve inlet opens the valve and flows through it to the first stage of the fuel pump and fuel pump shaft seal cavity.

Termination of helium pressure at the end of the prelaunch cooldown period allows the spring to close the valve. The spring preload and pressure from the fuel pump discharge entering behind the valve poppet during engine operation keep the valve closed to prevent overboard fuel flow during engine operation.

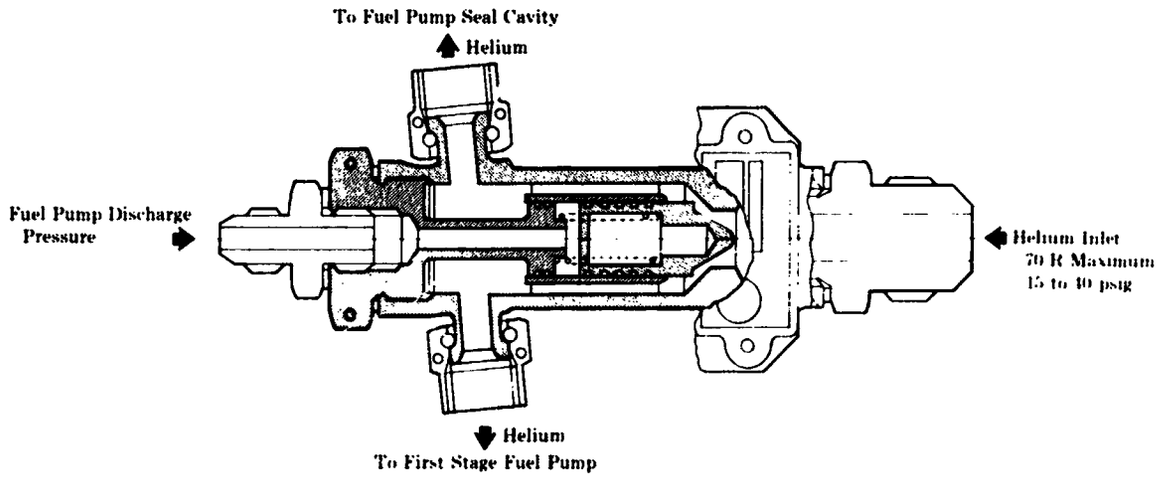

Figure I-7. Prelaunch Cooldown Check Valve FD 10743A

8. Igniter Oxidizer Supply Valve

The igniter oxidizer supply valve (figure I-8) is a two-position, pressure-actuated, shuttle-type poppet valve. The purpose of the valve is to allow a gaseous oxygen flow to the spark igniter during engine start and to terminate the flow during engine acceleration.

Oxidizer pump inlet pressure during engine prestart unseats the poppet and allows oxidizer flow from the oxidizer injector inlet pickup to the spark igniter where it is mixed with the fuel. Oxidizer injector inlet pressure, acting on the opposite end of the piston, becomes greater than the pump inlet pressure during acceleration. This closes the poppet valve and shuts off the flow of oxidizer to the igniter.

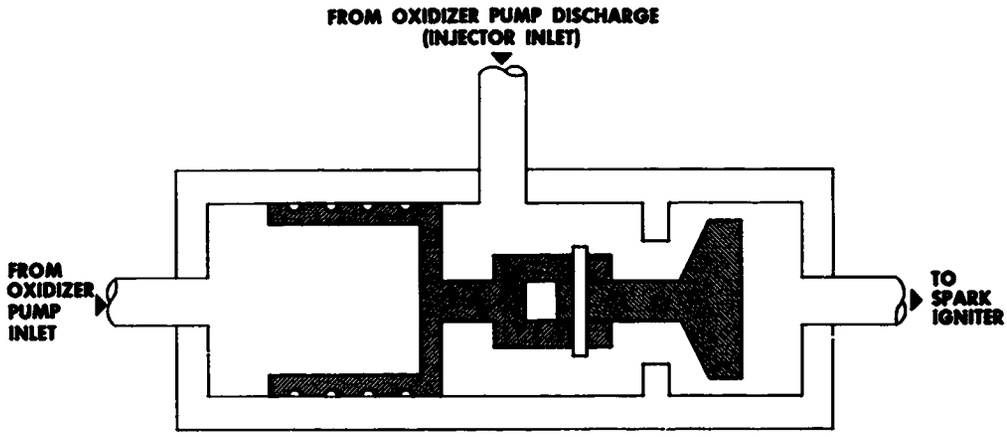

Figure I-8. Igniter Oxidizer Supply Valve Schematic FD 3161

B. TURBOPUMP ASSEMBLY

The main function of the turbopump assembly is to supply oxygen and hydrogen to the engine combustion chamber at the proper pressures and flowrates.

The turbopump assembly (figure I-9) consists of: (1) a liquid hydrogen pump powered by a hydrogen-driven turbine mounted on a common main shaft; and (2) a liquid oxygen pump mounted beside the liquid hydrogen pump and driven through a gear train by the hydrogen pump turbine shaft. All rotating assemblies in the turbopump assembly are mounted on unlubricated, hydrogen-cooled ball and roller bearings. The complete assembly is contained in six aluminum housings.

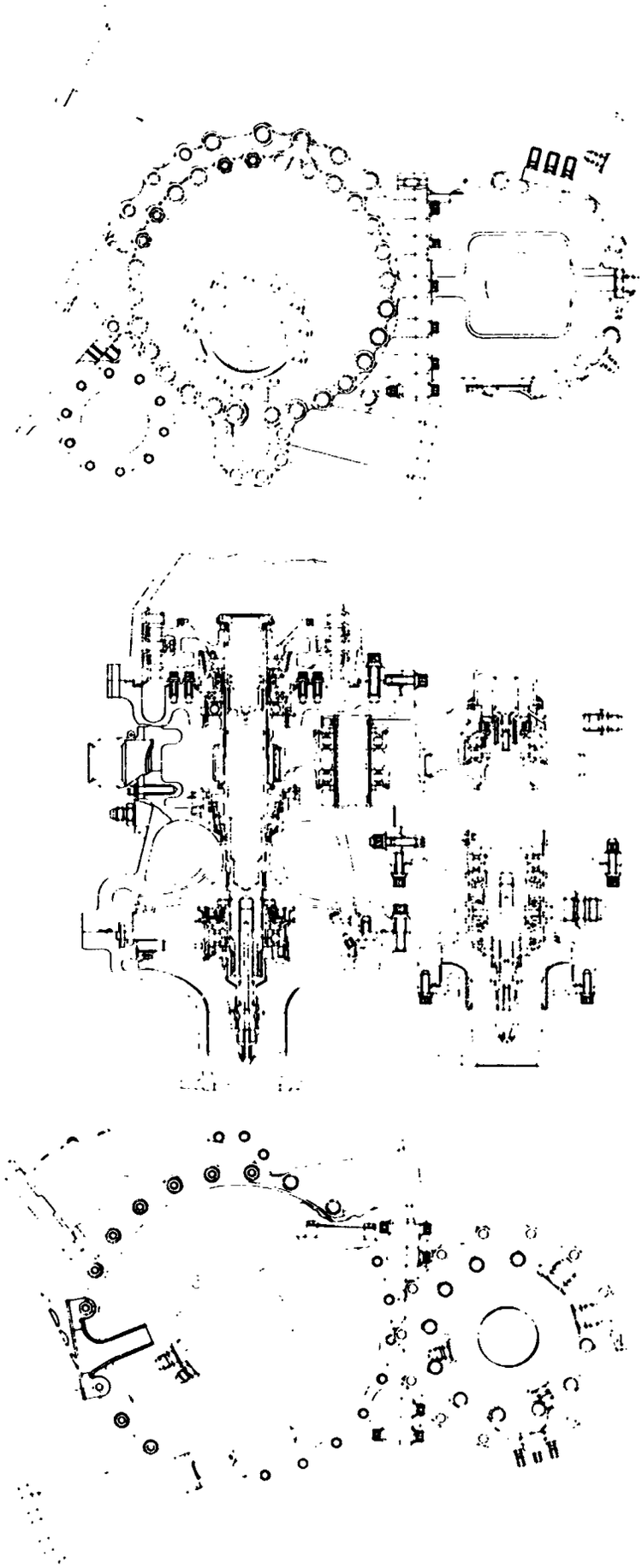

FD 1510C

Figure I-9. Turbopump Assembly

The main drive shaft incorporates passages for hydrogen coolant flow to the turbine bearing. This coolant is bled from the second stage of the fuel pump as shown in figure I-10. Liquid hydrogen coolant is supplied to the oxidizer pump thrust bearing through a drilled passage in the fuel pump housing. The coolant flow through this passage is supplied from the first-stage pump contour. All other bearings in the turbopump are cooled by conduction and low-pressure hydrogen flow through the gearbox cavity.

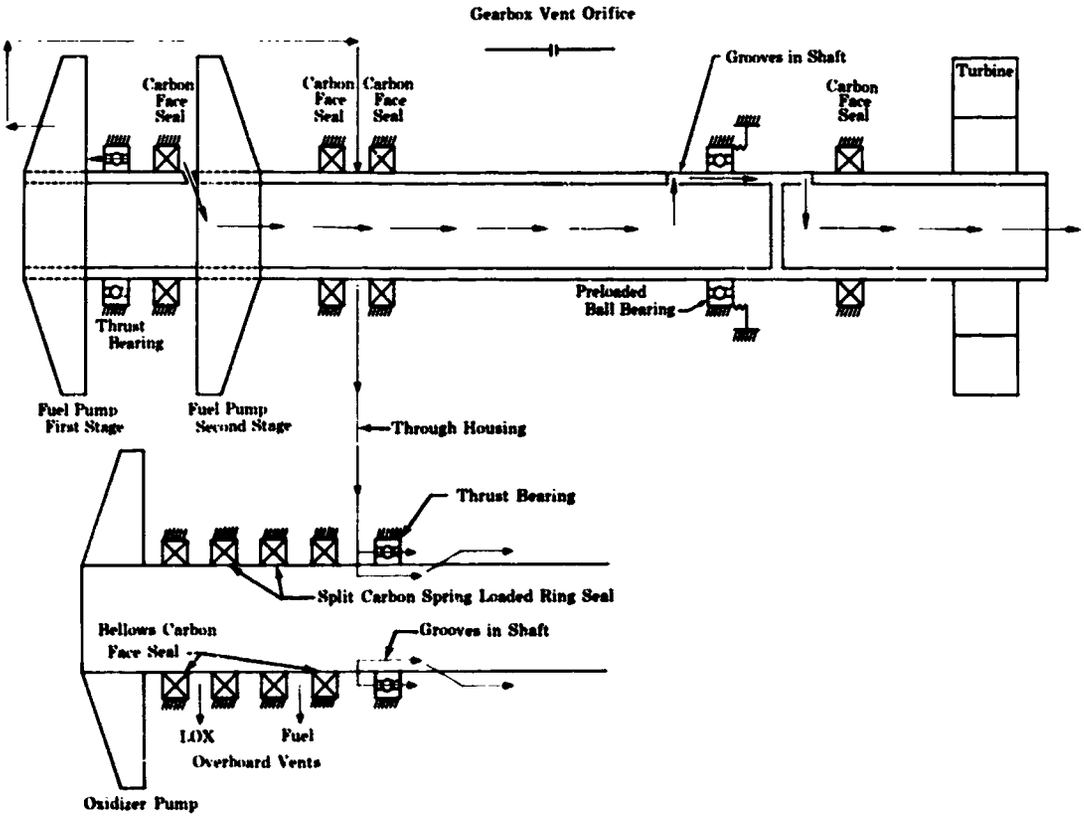

Figure I-10. Bearing Coolant Schematic FD 3167E

The ball bearing at the turbine is preloaded by a spring washer that assures proper thrust loading of the shaft bearings. The fuel pump and turbine combined thrust load is transferred to the main pump housing by the ball thrust bearing located between the fuel pump stages. The loads on the oxidizer pump shaft are supported by a ball thrust bearing located in the oxidizer pump housing and a cylindrical roller bearing mounted near the accessory drive. The idler gear radial load is carried by a pair of identical cylindrical roller bearings mounted on a nonrotating shaft. All bearings and races are made of consumable-electrode vacuum-melted, AMS 5630 corrosion-resistant steel and are designed to operate unlubricated at 38° to 158°R. The ball bearings incorporate split inner races and inner race riding cages of aluminum-armored plastic. Bearing spin/roll ratio is 19%.

Spur gears on the main drive shaft, idler shaft, and oxidizer pump shaft transmit power to the oxidizer pump. They are dry-film lubricated, hydrogen-cooled gears made of AMS 6260 steel. Calculated load characteristics for the gears are shown in Appendix A. The oxidizer pump shaft gear also incorporates five lugs which provide the tachometer generator drive pickup points.

All carbon-face seals on the fuel pump shaft are of similar construction. The carbon seal is held against the roating seal face by a spring-loaded retainer. A metal ring seal in the retainer limits leakage past the seal housing.

The fuel pump interstage seal (figure I-11) is designed to limit leakage between pump stages, while a two-step, carbon-face seal (figure I-12) limits leakage of hydrogen into the gearbox chamber. The turbine seal is designed to limit leakage of hydrogen from the turbine area into the gearbox chamber.

All interstage leakage within the turbine itself is controlled by labyrinth seals between stages. (See figure I-13.)

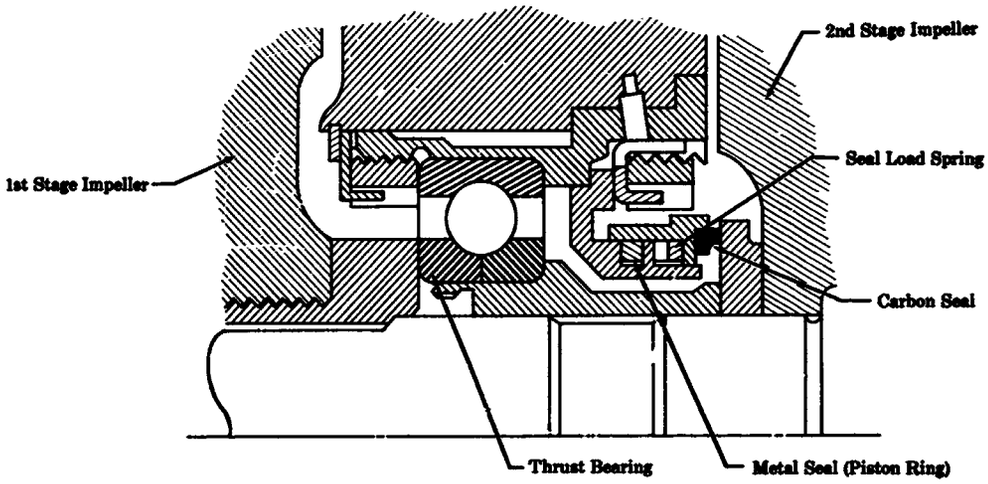

Figure I-11. Fuel Pump Interstage Seal FD 3150A

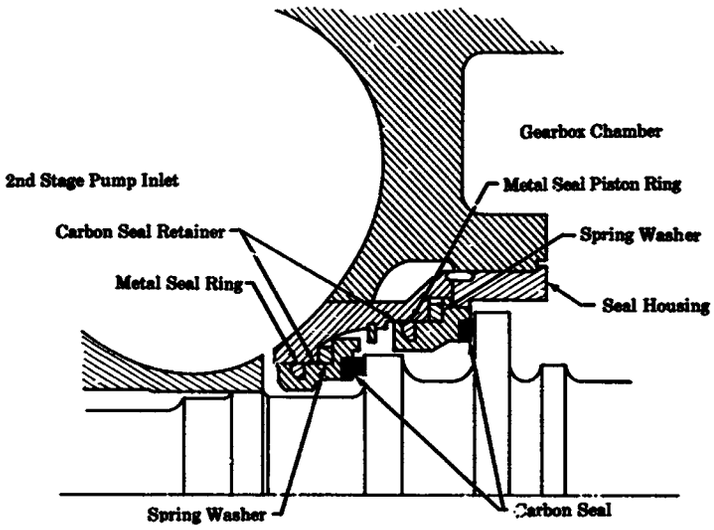

Figure I-12. Fuel Pump Face Seal FD 3148A

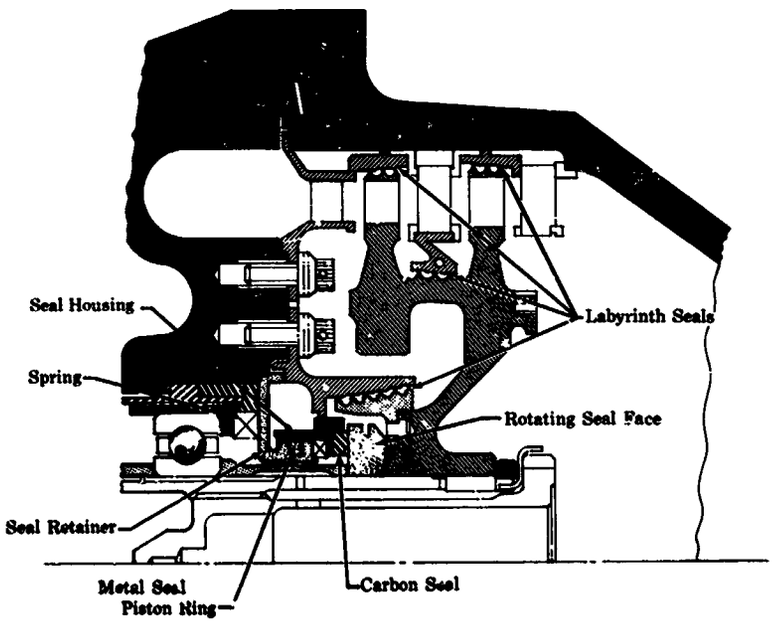

Figure I-13. Turbine Rotor Seal FD 10742

The oxidizer pump shaft seal, which is located between the oxidizer pump and gearbox, is shown in figure I-14. The seal consists of two bellows-type, carbon-face, primary seals that minimize the leakage of hydrogen and oxygen. Overboard vents are provided for leakage past these seals. The bellows is splined to a retainer that absorbs torque and provides functional damping but permits axial movement. Two carbon ring seals, which are loaded by spring washers, are used as backup seals to prevent mixing of propellants in case of a primary seal failure. The backup seals are vented to a separate overboard port. The accessory drive pad seal (figure I-15) is also a splined bellows seal which restricts the overboard leakage of hydrogen at that location.

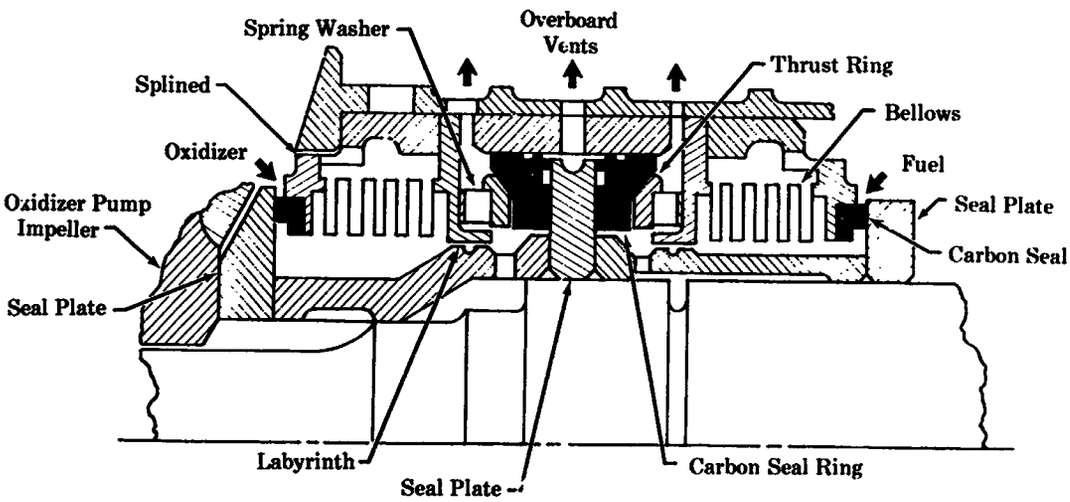

Figure I-14. Oxidizer Pump Seal FD 3151C

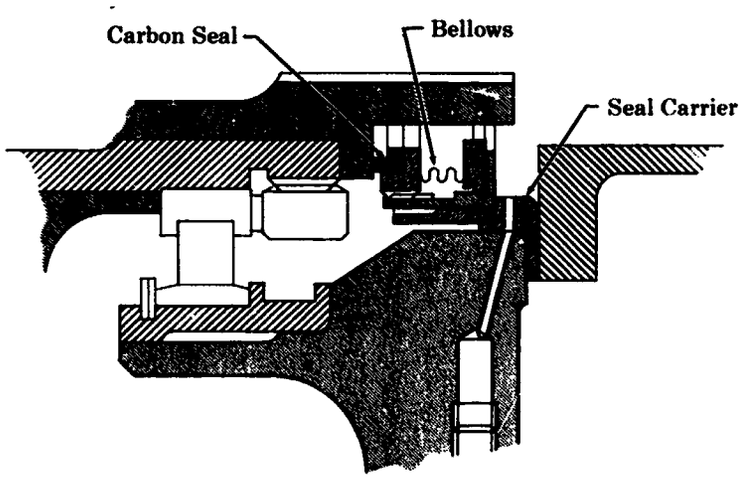

Figure I-15. Accessory Drive Pad Seal FD 10741

Analysis of the fuel and oxidizer pump shafts indicates critical speeds of 65,000 and 40,000 rpm, respectively. Turbopump vibration is minimized by balancing of the rotating parts as described in Appendix B.

1. Fuel Pump

The fuel pump supplies liquid hydrogen to the engine. It is a two-stage centrifugal pump, with the two back-shrouded impellers mounted back-to-back to minimize thrust unbalance. Recovery of velocity head is accomplished through a straight conical diffuser connected to a volute collector. A three-bladed axial flow inducer on the same shaft is located upstream of the first-stage impeller. The inducer blades are tapered at inlet and exit and were developed to provide maximum operating range at low net positive suction pressure.

The first- and second-stage impellers incorporate 22-1/2° and 90° blade exit angles, respectively. This arrangement provides the optimum match between stall margin, which is improved with increased sweep angle, and required head rise, which decreases with decreased angle. The first- and second-stage impellers run with 0.055- and 0.061-in. nominal clearance, respectively, between blade and housing contours. They are machined from AMS 4135 aluminum alloy, which has a 0.2% yield strength of 54,000 psi at room temperature.

Pump performance is discussed in Section V and Appendix B.

2. Oxidizer Pump

The oxidizer pump is a single-stage centrifugal pump which supplies oxygen directly to the engine combustion chamber. The fully shrouded impeller design permits adequate clearance between impeller and housing contours to eliminate the possibility of impeller rub. Velocity head recovery is accomplished, as in the fuel pump, through a conical diffuser and volute collector. A three-bladed, axial-flow, partially shrouded inducer on the oxidizer pump shaft is located upstream of the impeller and performs essentially the same function as the fuel pump inducer. The inducer shroud incorporates a labyrinth seal to minimize recirculation.

Pump performance is discussed in Section V and Appendix B.

3. Turbine

The function of the turbine is to provide power to drive the fuel and oxidizer pumps by utilizing the energy in the hydrogen from the engine heat exchanger. The turbine is a pressure-compounded, full-admission, two-stage design with exit guide vanes to minimize discharge swirl losses. Both blade stages are fully shrouded, and labyrinth seals are incorporated to minimize interstage and tip leakage. The turbine rotor with shroud is shown in figure I-16. The conical web between the blade disk and bore is designed to absorb disk growth, minimize hub distortion, and prevent unbalance. Vibration analysis of the turbine rotor indicates that resonant frequencies are outside the operating range.

Turbine performance is discussed in Section V and Appendix B.

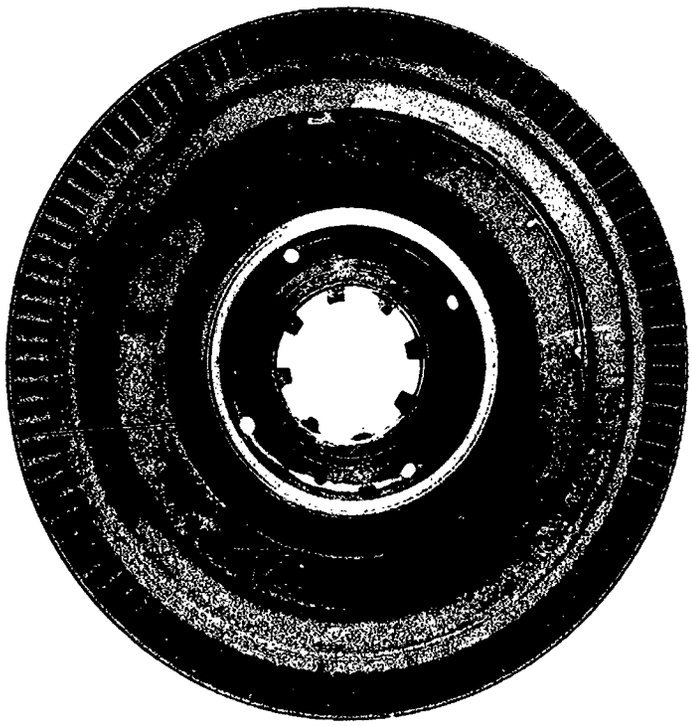

Figure I-16. Turbine Rotor with Shroud FE 46939

C. ACCESSORY DRIVE PAD

An accessory drive pad is located on the aft end of the oxidizer pump shaft. The pad is a modified AND 20000 type. Complete pad definition is shown on the engine installation drawing. Specifications for its use are given in the applicable Rocket Engine Installation Handbook.

D. GEARBOX VENT ORIFICE

The gearbox vent orifice maintains gearbox pressure at approximately 37 psia with an overboard flowrate of 0.04 lb per second.

E. THRUST CHAMBER

The RL10A-3-3 thrust chamber is a regeneratively cooled, furnace-brazed assembly consisting of a fuel inlet manifold; 180 short, single-tapered tubes; a turnaround manifold; 180 full-length, double-tapered tubes; a fuel exit manifold; and various stiffeners and component supports. The thrust chamber has two main functions:

1. To provide a chamber of converging-diverging design for the combustion and expulsion of propellants at high velocity to produce thrust.

2. To serve as a heat exchanger to supply turbine power for the propellant pumps.

The high velocity gases required for thrust are produced in the combustion chamber by the chemical reaction of propellants, which release a great amount of heat. In this chamber design, some of this heat is transferred to the chamber coolant flowing in the tubes, and is used to provide energy for driving the turbopump.

Hydrogen enters the thrust chamber at the inlet manifold downstream of the throat, and immediately flows into 180 single-tapered short tubes that are interleaved between 180 double-tapered, full-length tubes. The full-length tubes form the full periphery of the combustion chamber, the throat, and the nozzle down to the junction of the short tubes. The periphery of the remainder of the nozzle is formed by all the tubes. The hydrogen flows rearward in the short tubes to the turnaround manifold where it enters the 180 full-length tubes and then travels forward the entire length of the

chamber to the exit manifold. This partial two-pass method of chamber construction was adopted to achieve high coolant velocity and heat transfer, and low tube-wall temperature.

Both full-length and short tubes are brazed together to form a seal, and are structurally supported by stiffener bands to carry the chamber hoop loads. These bands also minimize the effect of any flow-induced vibration. Calculated stresses for various locations considered to be most critical are shown in figure A-1. Figure I-17 shows examples of the full-length double-tapered, and short single-tapered tubes.

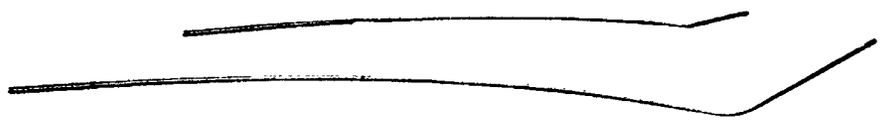

Figure I-17. Full-Length, Double-Tapered Tube; and Short, Single-Tapered Tube FE 3143

In flowing from inlet to exit manifold, the hydrogen receives sufficient heat energy to operate the turbine at the design point with approximately 3.9% of fuel bypassing the turbine.

The nozzle contour design is based on a method of characteristic solution for ideal expansion that minimizes the formation of strong shock waves. The nozzle is shorter than the ideal length to optimize weight and performance. Lower friction losses with this truncated design more than offset the theoretical thrust increase that would result from an ideal nozzle length. Thrust chamber design data are shown in Section V.

Individual tube stresses in the hoop plane of the nozzle are uniformly low (below 13,000 psi). Stresses in the axial plane resulting from temperature gradients across the tube walls are in the plastic range in some locations, but are well below the ultimate strength of the material due to the nature of the loading. Thrust chamber tube temperatures and pressures are plotted in figure D-3.

F. PROPELLANT INJECTOR

The propellant injector is shown schematically in figure I-18. The function of the injector is to atomize the oxidizer and promote thorough mixing of the fuel and oxidizer to provide the correct conditions for efficient combustion of the propellants.

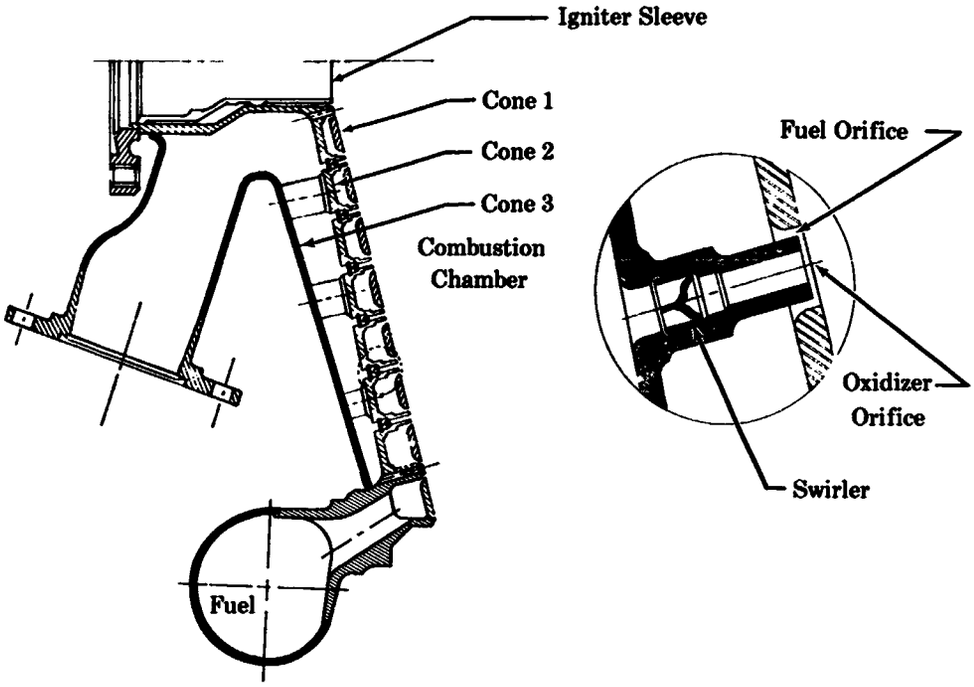

Figure I-18. Propellant Injector FD 1554F

The propellant injector consists of 216 elements arranged in 8 equally spaced concentric circles. Each element consists of an oxidizer orifice and a concentric fuel orifice. All elements except those in the inner and outer rows incorporate swirlers which aid in the dispersion of the oxidizer.

Liquid oxygen enters the injector through the oxidizer injector manifold, flows into the cavity between cones 2 and 3, and then flows out of the oxidizer orifices and into the combustion chamber.

Gaseous hydrogen enters the peripheral fuel injector manifold and flows into the cavity between cones 1 and 2. Most of the hydrogen flows out through the annular orifices around the elements, into the combustion chamber where it mixes with the oxidizer. Some of the hydrogen flows past and cools the igniter sleeve, and then enters the igniter chamber. (Refer to paragraph K of this Section.) The rest of the hydrogen passes through cone 1, which consists of a porous-welded, steel-mesh plate. This flow provides transpiration cooling of the injector face (cone 1) and amounts to approximately 10% of the total hydrogen flow.

Immediate contact between oxidizer and fuel is made at each element as the oxidizer and fuel leave the face of the injector and enter the combustion chamber. This configuration provides (1) thorough combustion, (2) high combustion efficiency, and (3) high specific impulse. Combustion instability is also eliminated. Stress data are given in Appendix A.

G. PROPELLANT PIPING

The main propellant piping system is composed of the following six lines:

1. Oxidizer flow control and purge check valve to injector inlet
2. First-stage fuel pump discharge to second-stage fuel pump inlet
3. Fuel pump discharge to fuel pump discharge cooldown and pressure relief valve
4. Fuel pump discharge and pressure relief valve to thrust chamber inlet
5. Thrust chamber exit to turbine inlet
6. Turbine discharge to main fuel shutoff valve.

Rigid piping is used in the main propellant system. AISI 347 steel was selected because of its elongation properties at cryogenic temperatures and the ease of fabricating high-quality, welded joints.

The wall thickness of each manifold is based on 0.2% yield strength at maximum transient pressures.

The main propellant system connections are sealed with radial-loaded metallic angle gaskets as shown in figure I-19. Tolerance control on piping is closely held to maintain alignment required for angle gasket seal joints. The angle gasket seal is used because of its ability to seal gaseous fluids and to withstand long-term storage.

H. ENGINE PLUMBING

Rigid small lines constructed of AMS 5571 tubing are used on the engine. Length between support centers is based on Military Specification MIL-P-5518B.

Tubes have brazed ferrules that mate with cone end connectors. (See figure I-20.) A captive nut on the tube assembly draws together the cone surfaces of the ferrule and AN-type fittings with 37.5-degree cone angle. Teflon-coated, aluminum flat gaskets are used for sealing connectors on bosses as shown.

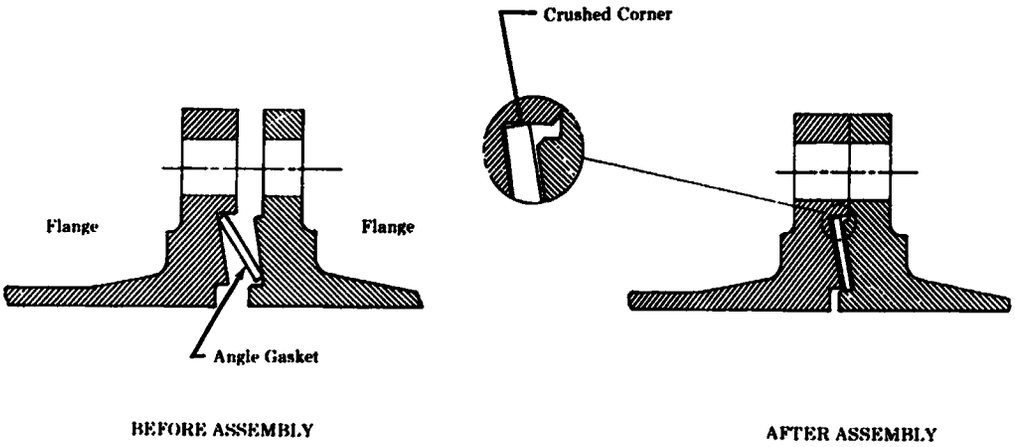

Figure I-19. Propellant Pipe Sealing Method FD 1557A

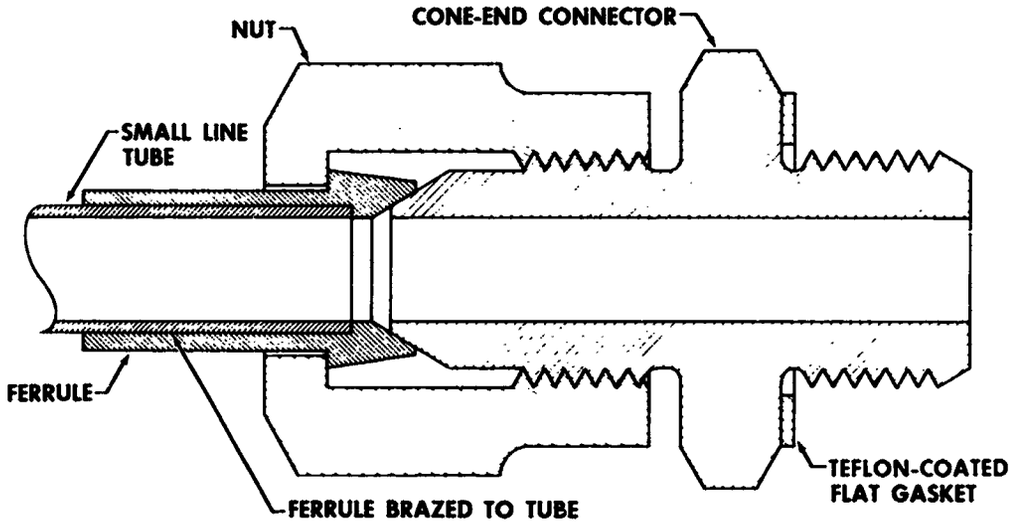

Figure I-20. Small Line Sealing Method FD 3166A

1. ENGINE MOUNT SYSTEM

The RL10A-3-3 engine mount system provides a means of attaching the engine to the vehicle. It also provides a universal bearing system to allow gimbaling of the engine for thrust vectoring.

The gimbal mount attachment (figure I-21) consists of an aluminum pedestal with four bolt holes. The gimbaling action is accomplished by virtue of steel pins and a disk that connect the pedestal to the conical mount. The pins and the disk are coated with a solid lubricant. These parts permit a gimbal movement of ± 4 degrees in a square pattern.

The mount is fastened to the engine by six bolts that pass through the bottom of the mount and thread into the propellant injector. The engine-actuator attachment consists of two lugs located on the thrust chamber

fuel inlet manifold. The calculated stresses at these attachment points are shown in Appendix A.

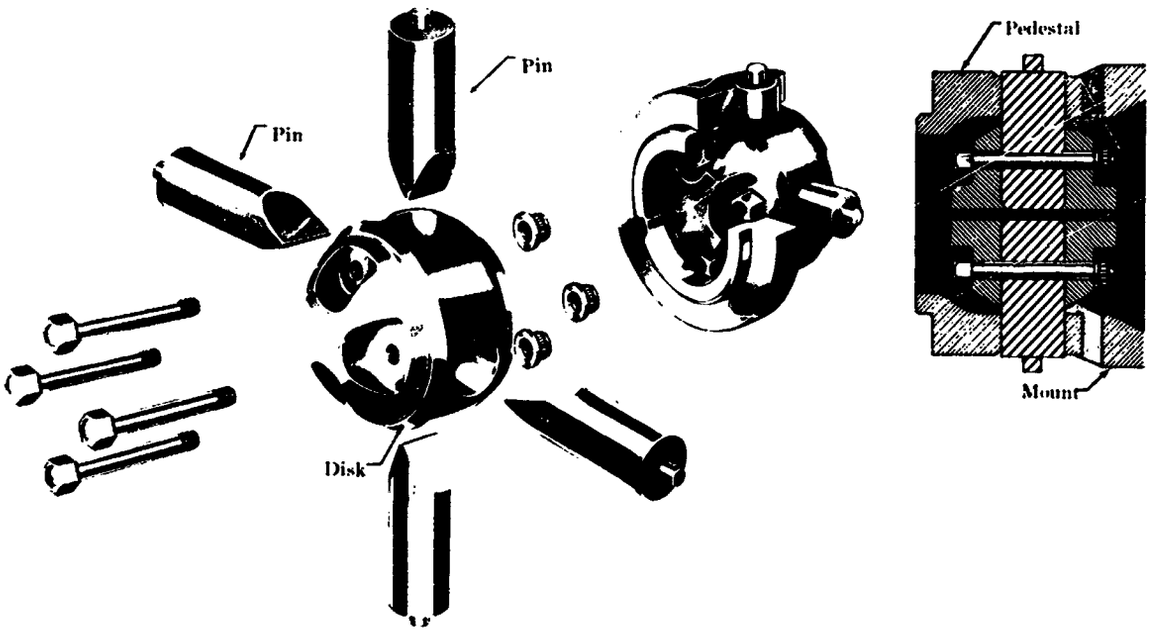

Figure I-21. Gimbal Assembly FD 1547C

J. ELECTRICAL REQUIREMENTS

The RL10A-3-3 engine requires electrical power to operate the prestart and the start solenoid valves and to supply the engine ignition system.

A steady-state voltage supply of 20 to 30 volts dc is required. Specific requirements are as follows:

1. Prestart and start solenoid valves - 2.0 amperes at 28 volts dc for each valve.
2. Ignition System - 2.5 amperes at 28 volts dc for a minimum of 1.5 seconds during each engine starting cycle.

K. IGNITION SYSTEM

1. General

The functions of the RL10A-3-3 ignition system are to provide a combustible mixture of propellants in the vicinity of the spark igniter, provide a series of sparks across the igniter plug gap upon vehicle command, produce ignition of these propellants, and propagate this combustion to the propellants in the combustion chamber.

The igniter propellants are introduced into the vicinity of the spark igniter in the following manner. (See figure I-22.) Fuel and oxidizer are fed into the annulus surrounding the spark igniter. The oxidizer enters the annulus from a line connected to the igniter oxidizer supply valve. The fuel enters the annulus from the injector through fuel metering orifices in the igniter plug housing.

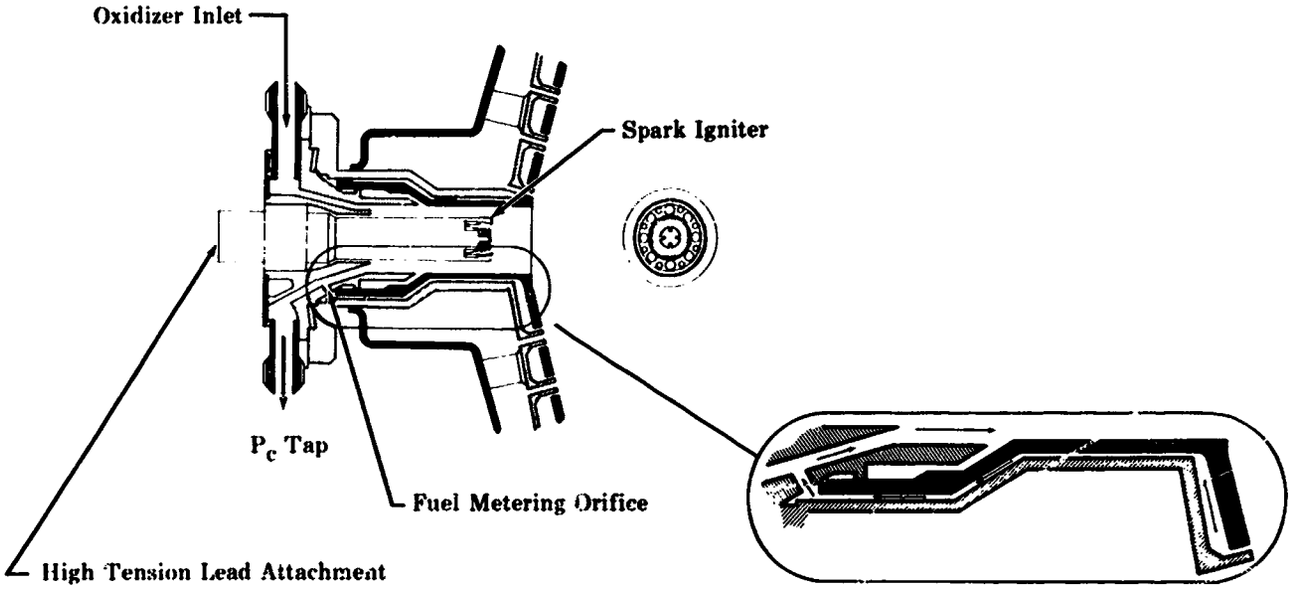

Figure I-22. Igniter Assembly FD 3134A

The propellants in the spark igniter annulus are ignited by the spark igniter. As the engine accelerates, the flow of oxidizer to the spark igniter annulus is terminated by the closing of the igniter oxidizer supply valve.

The spark igniter has a special electrode configuration containing many sharp corners that reduce and stabilize the required spark gap breakdown voltage and inhibit moisture accumulation.

The sparking voltage is supplied to the igniter from an exciter assembly, through a rigid, radio-shielded, high-tension lead. The exciter assembly and high-tension lead are hermetically sealed and internally pressurized to 20 to 35 psia to prevent electrical breakdown when operating under vacuum conditions. Epoxy coating is applied to the external surfaces and joints of the system to minimize the possibility of internal pressure loss.

At the beginning of the start cycle, which follows the prestart (cooldown) cycle, the vehicle supplies power to the exciter assembly. The exact length of time is governed by the vehicle programing. The

exciter releases a capacitance discharge to the spark igniter. A minimum of 20 sparks per second is furnished at a nominal-stored energy level of 0.5 joule per spark.

2. Exciter Operation

For this discussion, see figure I-23. Low-voltage dc power, supplied to the two-pin input connector, passes from the connector through a radio-noise filter. This internal-filter circuit, which prevents high-frequency feedback into the vehicle electrical system, is arranged to allow the use of a solid-state switching device by the vehicle manufacturer. From the filter, the input current flows through the primary of a vibrator transformer and through a pair of normally closed contacts to ground. A breaker capacitor (C-4) is connected across these contacts to damp excessive arcing.

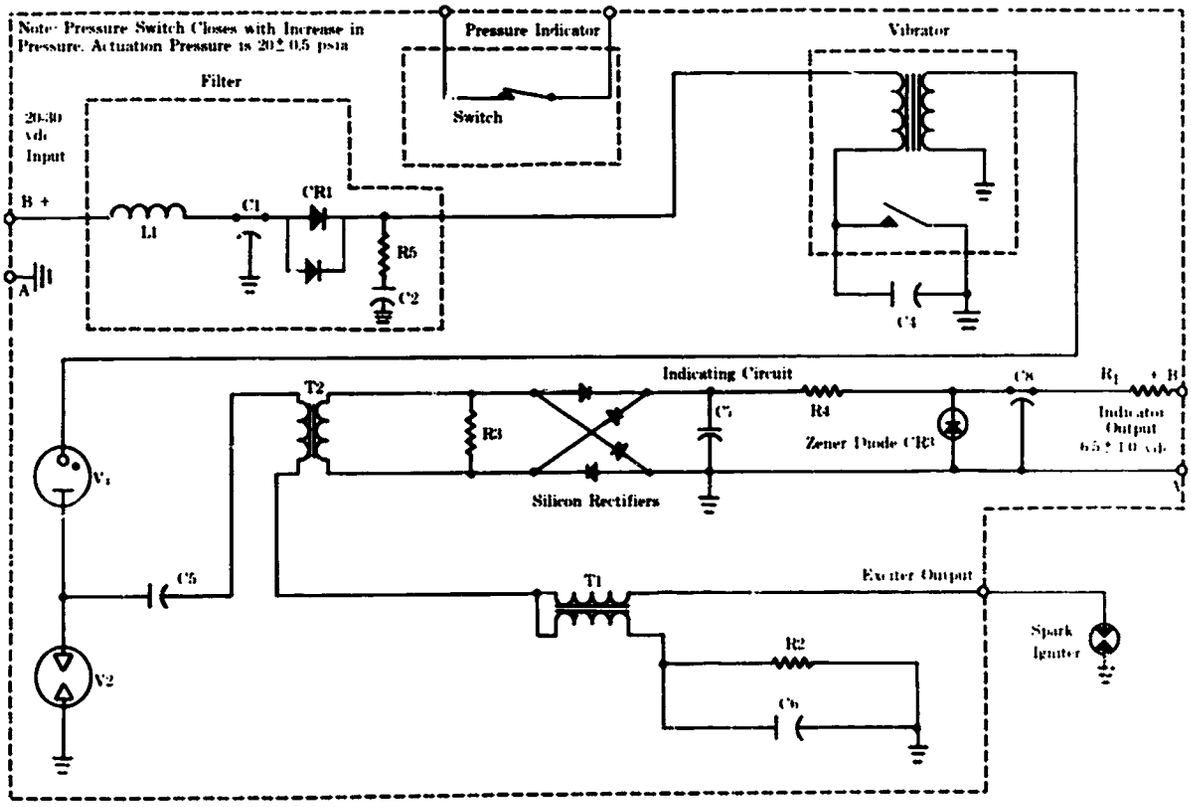

Figure I-23. Ignition System Schematic FD 3154B

With the contacts closed, the flow of current through the coil produces a magnetic field. The magnetic force exerted by this field pulls the armature against the tension of the spring on which it is mounted. The movement of the armature causes the contact points to open, the flow of current stops, and the magnetic field collapses. The spring tension then returns the armature to its original position, closing the contacts, and the cycle recommences.

Each time the magnetic field collapses, it induces a high voltage in the secondary of the vibrator transformer. This produces successive pulses flowing through a gas-charged rectifier tube (VI) that limits the flow to a single direction and into the storage capacitor (C5). The storage capacitor (C5) accumulates an increasing charge at a constantly increasing voltage.

When this intermediate voltage reaches the predetermined level for which the sealed spark gap in the discharger tube (V2) has been calibrated, the gap breaks down. A portion of the accumulated charge on the storage capacitor follows a path through the primary of the indicating circuit transformer (T2), the primary of the triggering transformer (T1), the trigger capacitor (C6) to ground, and back through the discharger tube (V2) to the opposite side of the storage capacitor (C5).

This surge of current induces a voltage in the secondary of the trigger transformer (T1) sufficient to ionize the gap at the spark igniter and produce a trigger spark. The remainder of the accumulated energy on the storage capacitor is immediately discharged through the secondary of the trigger transformer and dissipated at the spark igniter. The path of flow in the discharge circuit is through the primary of the indicating circuit transformer (T2), the secondary of the triggering transformer (T1), the spark igniter to ground, and back through the discharger tube (V2) to the opposite side of the storage capacitor.

The bleeder resistor (R2) forms a part of the capacitor charging circuit and serves to dissipate the residual charge on the trigger capacitor between the completion of one discharge at the spark igniter and the beginning of the next cycle.

The spark rate is affected by the input voltage and the exciter temperature. At lower input voltage values, more time is required to raise the intermediate voltage on the storage capacitor to the level necessary to break down the spark gap. However, since that level is established by the physical properties of the gap in the sealed discharger tube, a full store of energy will always be accumulated by the storage capacitor before discharge. At lower ambient temperatures, the losses in the circuit are less, and the capacity of the storage capacitor is lowered, causing the spark rate to increase.

A coupling transformer (T2) diverts a fraction of the discharging energy into the spark-indicating circuit. The diodes, resistors, and capacitors of this circuit rectify these pulses to a nominal 6.5 volt dc signal. Connection of a suitable indicating device to the external two-pin connector provides a monitor of the exciter operation. Internal pressurization of the exciter assembly is monitored by an absolute pressure-actuated microswitch mounted inside the exciter case. The switch is normally closed when the nitrogen pressure inside the exciter case exceeds 20 psia.

SECTION II
INSTALLATION DRAWING

The installation drawing of the RL10A-3-3 engine assembly is shown in figure II-1.

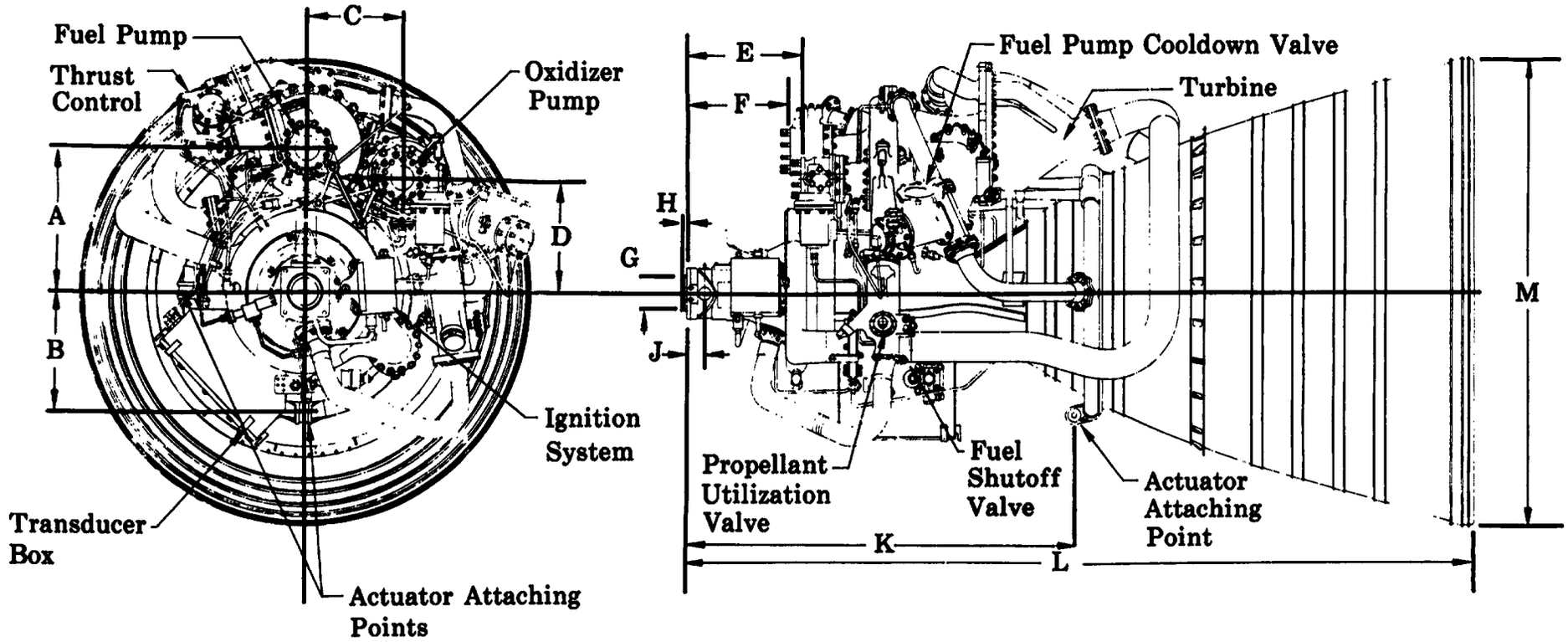

A — 11.750	D — 9.419	G — 2.876	K — 32.874
B — 10.172	E — 9.603	H — 0.240	L — 70.10
C — 8.128	F — 8.738	J — 1.500	M — 39.54

Dimensions are Nominal in Inches at Room Temperature

Figure II-1. RL10A-3-3 Engine Installation

FD 8895C

SECTION III
ASSEMBLY DRAWING

The assembly drawing for the RL10A-3-3 engine assembly is shown in figure III-1.

FD 8896A

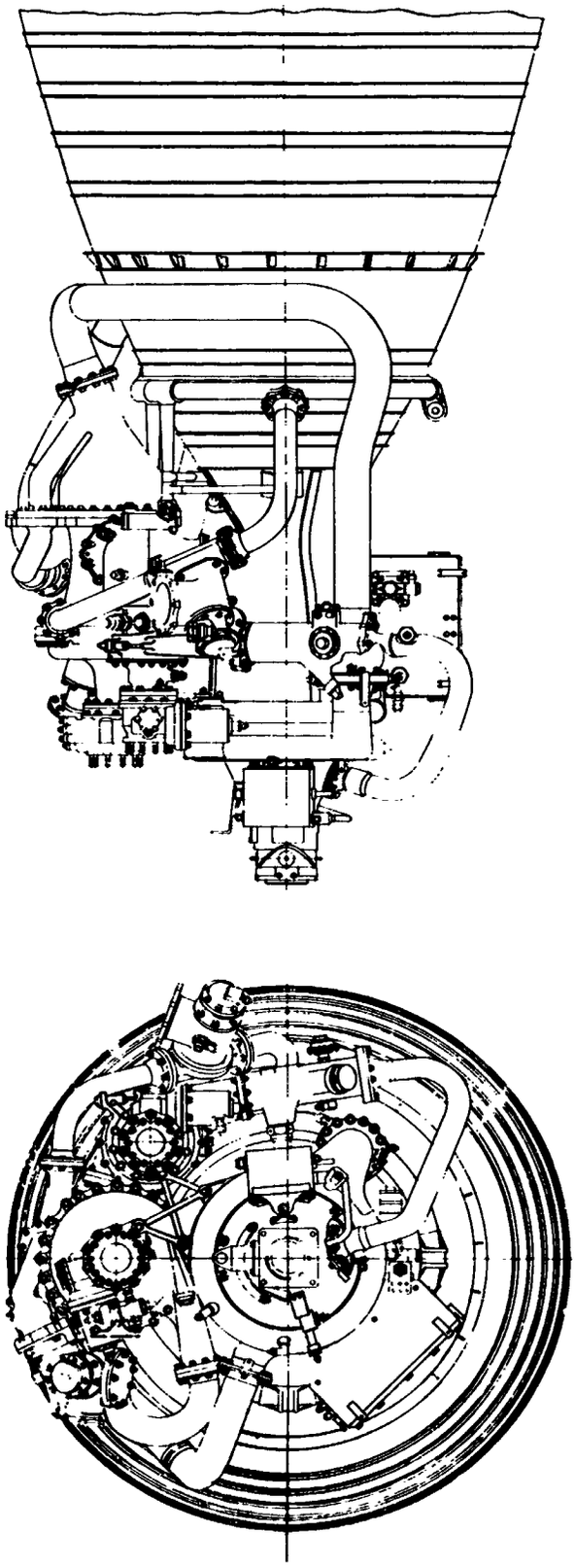

Figure III-1. RL10A-3-3 Engine Assembly

SECTION IV
WEIGHT BREAKDOWN

The weight breakdown of the RL10A-3-3 engine assembly is shown in table IV-1.

Table IV-1. RL10A-3-3 Assembly Weight Breakdown

Component	Weight, lb
Injector assembly	14.82
Thrust chamber	102.44
Turbopump	75.10
Turbopump mounts	3.78
Engine mount	10.75
Ignition system	7.10
Oxidizer inlet shutoff valve	5.55
Fuel inlet shutoff valve	5.81
Oxidizer flow control valve	6.92
Fuel cooldown valve interstage	7.03
Fuel cooldown valve downstream	6.26
Thrust control valve	5.30
Main fuel shutoff valve	3.41
Solenoid valves	7.68
Tube - oxidizer flow control valve to injector manifold	2.47
Tube - fuel pump to downstream cooldown valve	1.22
Tube - downstream cooldown valve to thrust chamber	1.55
Tube - thrust chamber to turbine	5.40
Tube - turbine to main fuel shutoff valve	8.40
Small lines	2.15
Connecting and miscellaneous hardware	6.65
Total basic engine weight (based on 3σ maximum) (Specification basic engine weight is 290.00 lb)	289.79
Nonchargeable weights	
Instrumentation	9.62
Hydraulic line brackets	.55
Nonflight items	1.23
Total engine weight	301.19

SECTION V
ANALYSIS OF STEADY-STATE AND TRANSIENT PERFORMANCE

A. STEADY-STATE PERFORMANCE

The steady-state performance characteristics of the RL10A-3-3 engine are given in table V-1.

Table V-1. Estimated RL10A-3-3 Engine Design Data

Parameter	Ratings		
Mixture ratio	4.4	5.0	5.6
Altitude, ft	200,000	200,000	200,000
Thrust, lb	14,720	15,000	15,220
Nominal specific impulse, sec	446	444	440
Fuel flow, lb/sec	6.11	5.63	5.24
Oxidizer flow, lb/sec	26.90	28.16	29.33
Chamber pressure (throat total), psia	383.7	385.2	385.3
Chamber pressure (injector face static), psia	392.8	394.6	395.0
Oxidizer Pump			
Inlet total pressure, psia	60.5	60.5	60.5
Inlet temperature, °R	175.3	175.3	175.3
Inlet density, lb/ft^3	68.8	68.8	68.8
Flow rate, gpm	175.5	183.7	191.3
Head rise, ft	1182	1123	1068
Speed, rpm	12,390	12,100	11,840
Efficiency, percent	61.9	63.2	64.3
Horsepower	93.5	90.9	88.6
Discharge pressure, psia	625.3	597.1	570.9
Fuel Pump			
Inlet total pressure, psia	30.0	30.0	30.0
Inlet temperature, °R	38.3	38.3	38.3
Inlet density, lb/ft^3	4.35	4.35	4.35
Discharge density, lb/ft^3	4.25	4.23	4.21
Flow rate, gpm	630.7	580.9	540.2
Fuel leakage, lb/sec	0.07	0.07	0.07
Head rise, ft	33,950	32,740	31,550

Table V-1. (Continued)

Fuel Pump (continued) Mixture Ratio	4.4	5.0	5.6
Speed, rpm	30,970	30,250	29,590
Efficiency, percent	55.9	54.7	53.6
Horsepower	635.5	574.7	524.1
Discharge pressure, psia	1030.9	991.3	952.6
Fuel pump downstream orifice and line pressure loss, psid	86.0	73.1	63.4
Fuel pump downstream orifice diameter, in.	0.683	0.683	0.683
Turbine			
Inlet total pressure, psia	722.3	698.1	676.5
Inlet total temperature, °R	316.5	353.9	386.6
Discharge static pressure, psia	498.5	496.3	492.2
Downstream total pressure, psia	495.9	493.1	488.5
Speed, rpm	30,970	30,250	29,590
Efficiency, percent	73.5	72.9	72.5
Horsepower	731.1	667.8	614.7
Turbine flow, lb/sec	5.99	5.35	4.87
Percent bypass flow	0.94	3.86	5.72
Effective area, in^2 (first stage)	1.169	1.169	1.169
Thrust control bypass area, in^2	0.0108	0.0454	0.0684
Thrust Chamber Assembly			
Chamber pressure (injector static), psia	392.8	394.6	395.0
Chamber pressure (throat total), psia	383.9	385.2	385.3
Fuel injector ΔP, psid	85.7	81.8	77.6
Oxidizer injector ΔP, psid	44.2	48.4	52.4
Fuel flow, lb/sec	6.04	5.56	5.17
Oxidizer flow, lb/sec	26.90	28.16	29.33
Chamber mixture ratio	4.45	5.06	5.67
c* efficiency, percent of shifting	98.9	98.6	98.3
c* (actual), ft/sec	7778	7626	7455

Table V-1. (Continued)

Thrust Chamber Assembly — Mixture Ratio	4.4	5.0	5.6
Combustion temperature (ideal), °R	5560	5829	6013
Gas constant (ideal), ft/°R	143.6	130.9	121.0
Specific heat ratio	1.216	1.210	1.206
Wall margin (minimum), °R	794	675	587
Characteristic length (L*), in.	38.7	38.7	38.7
Chamber area (injector end), in^2	83.4	83.4	83.4
Chamber throat diameter, in.	5.14	5.14	5.14
Chamber throat area, in^2	20.75	20.75	20.75
Discharge diamter ID, in.	38.8	38.8	38.8
Effective expansion ratio, A/A*	57.1	57.1	57.1
C_s (thrust coefficient efficiency), percent	98.1	98.0	97.9
Pressure Drop Summary			
Fuel			
Pump pressure rise, psid	1000.8	961.3	922.6
Downstream orifice and line, psid	86.0	73.1	63.4
Cooldown valve, psid	0.389	0.331	0.287
Jacket, psid	177.9	169.6	162.6
Gas line upstream of venturi, psid	3.33	3.23	3.13
Venturi, psid	40.9	47.0	46.7
Turbine (total to static), psid	223.8	201.8	184.3
Turbine discharge casing (static to total), psid	2.6	3.3	3.7
Gas line, turbine discharge to main fuel shutoff valve, psid	0.47	10.03	9.58
Main fuel shutoff valve, psid	6.96	6.66	6.35
Injector, psid	85.7	81.8	77.6
Oxidizer			
Pump pressure rise, psid	564.8	536.6	510.4
Mixture ratio control valve, psid	182.9	148.3	117.1
Liquid line, psid	5.39	5.90	6.40
Injector, psid	44.2	48.4	52.4

Table V-1. (Continued)

Temperature Change Summary	Mixture Ratio	4.4	5.0	5.6
Fuel				
Pump increase, °R		18.06	17.91	17.73
Jacket increase, °R		270.4	308.6	341.8
Turbine decrease, °R		21.8	22.4	23.0
Oxidizer				
Pump increase, °R		2.28	2.05	1.86

B. TRANSIENT PERFORMANCE

The transient performance characteristics of the RL10A-3-3 engine are shown in figures V-1 through V-3.

C. SEQUENCE OF ENGINE OPERATION

The design sequence of operation for the RL10A-3-3 engine is shown in figure V-4.

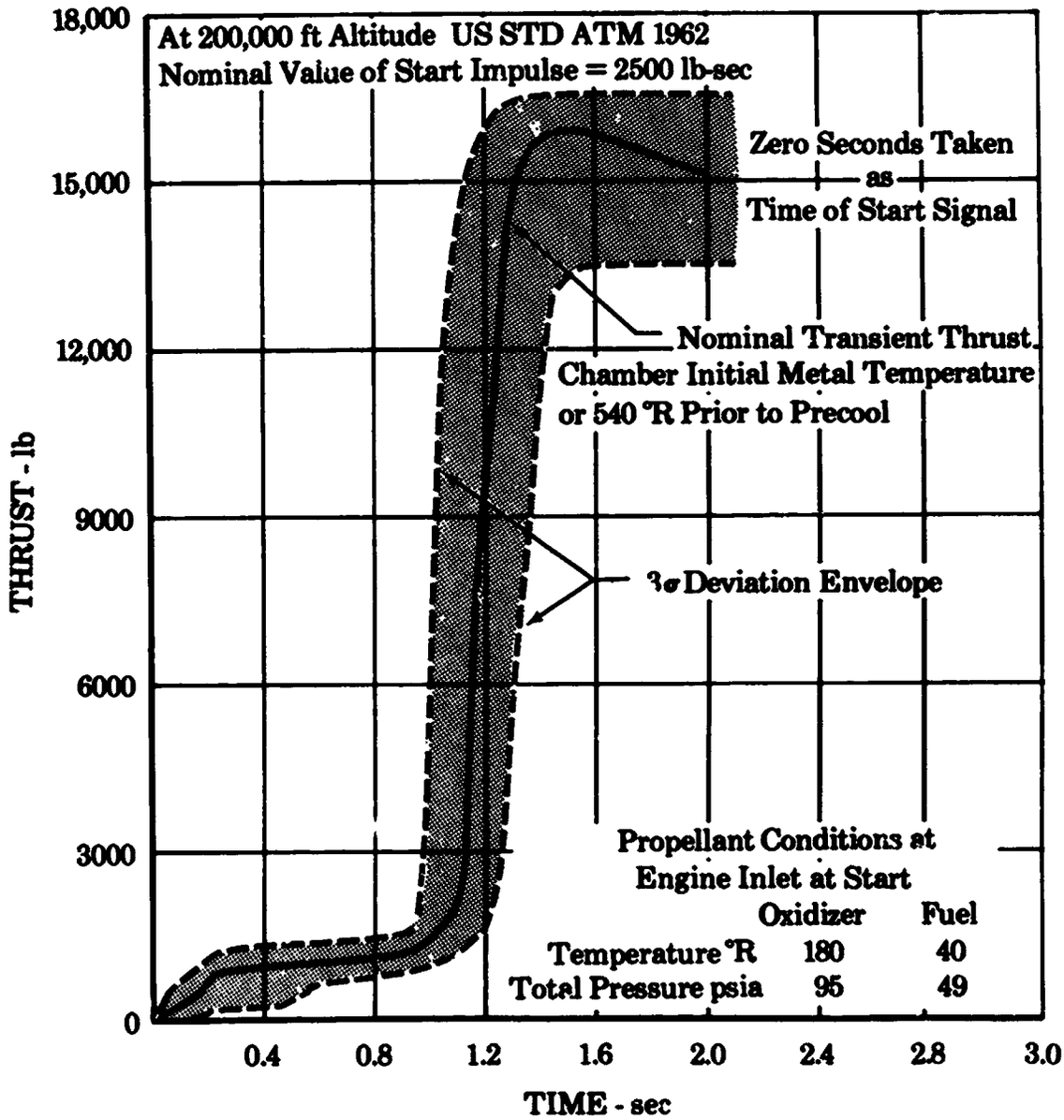

Figure V-1. Estimated Starting Transient Showing 3σ Deviation Envelope

FD 10951

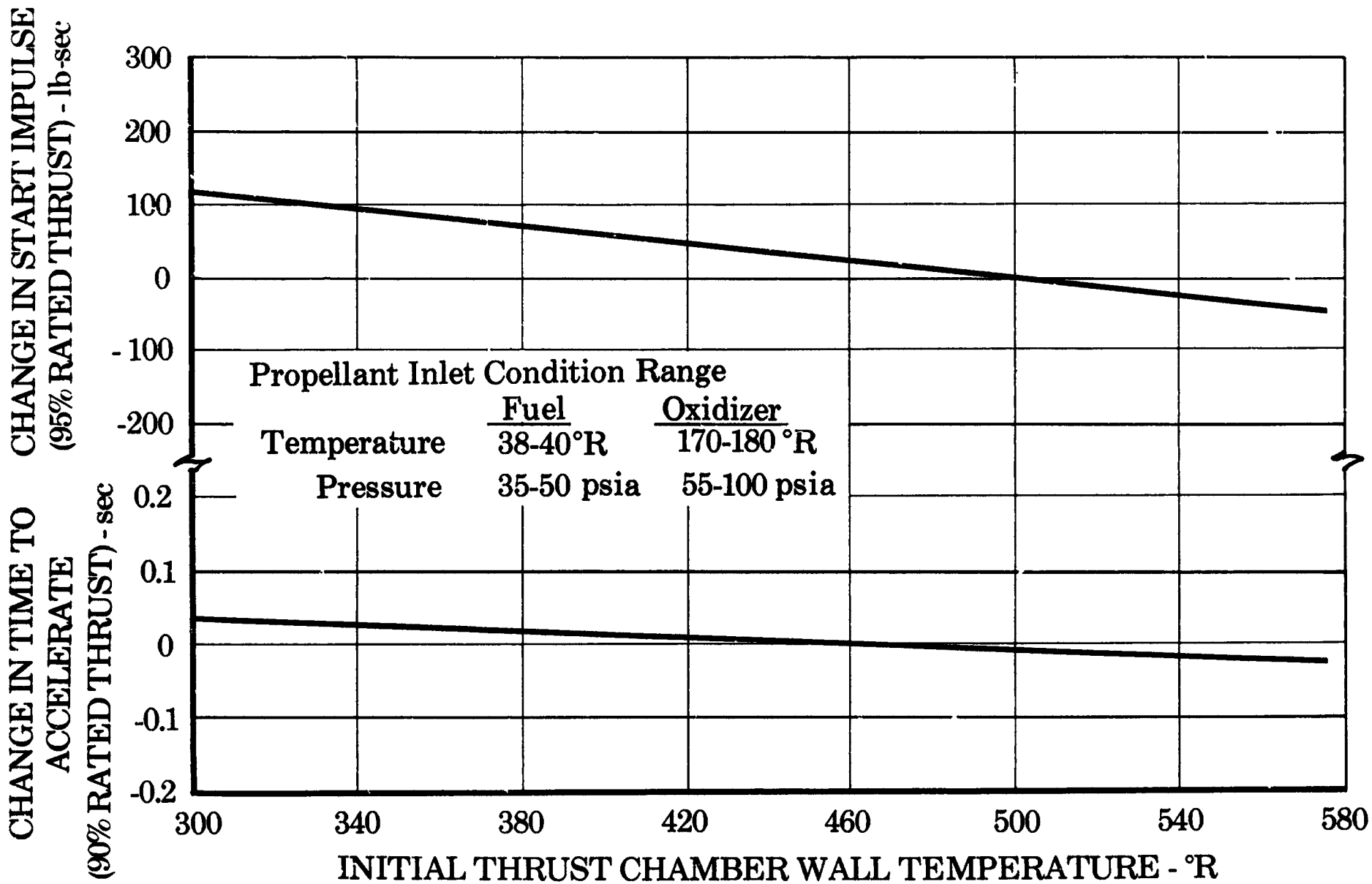

Figure V-2. Estimated Effects of Initial Thrust Chamber Wall Temperatures

FD 10787

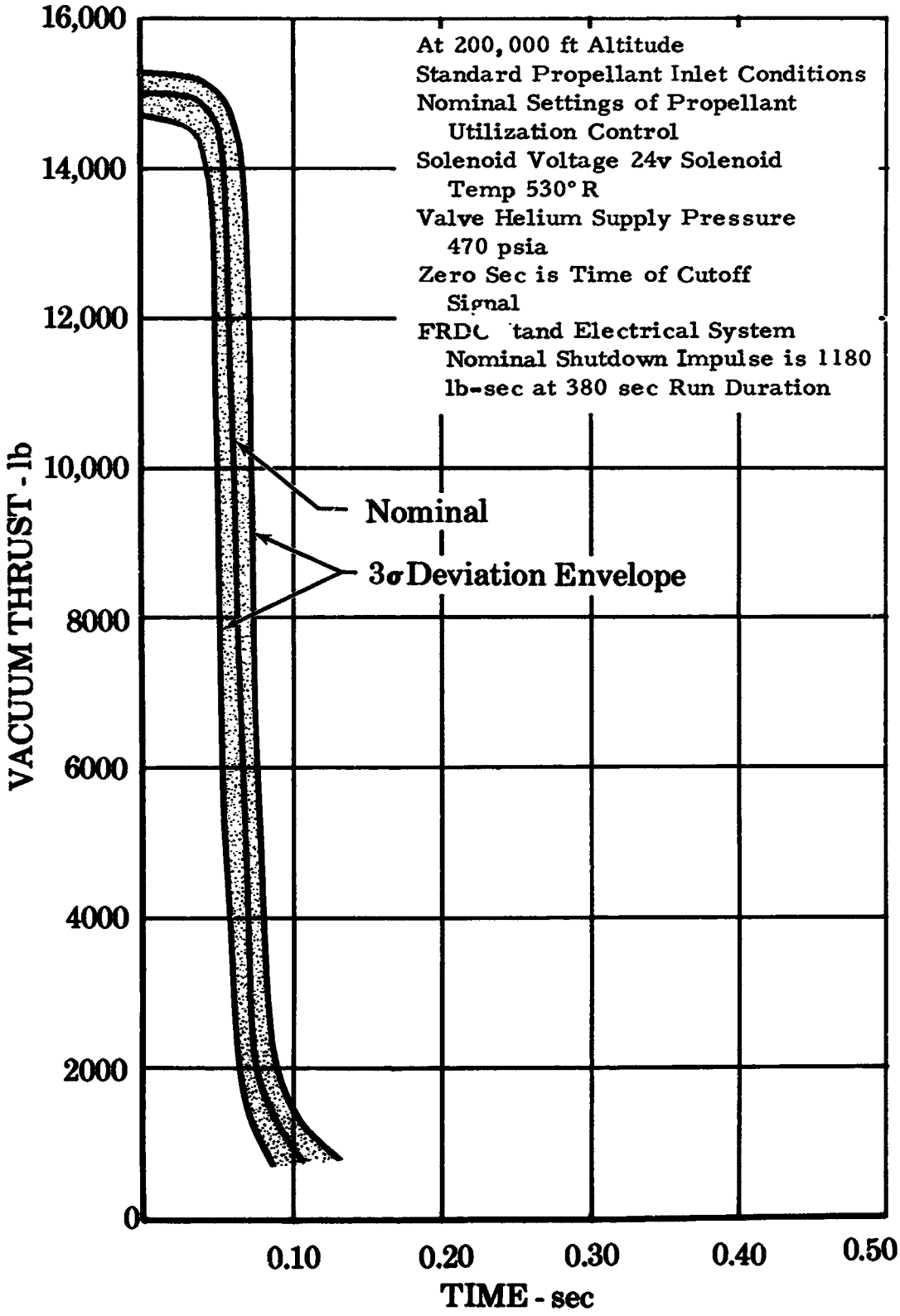

Figure V-3. Estimated Shutdown Transient Thrust vs Time

FD 10796

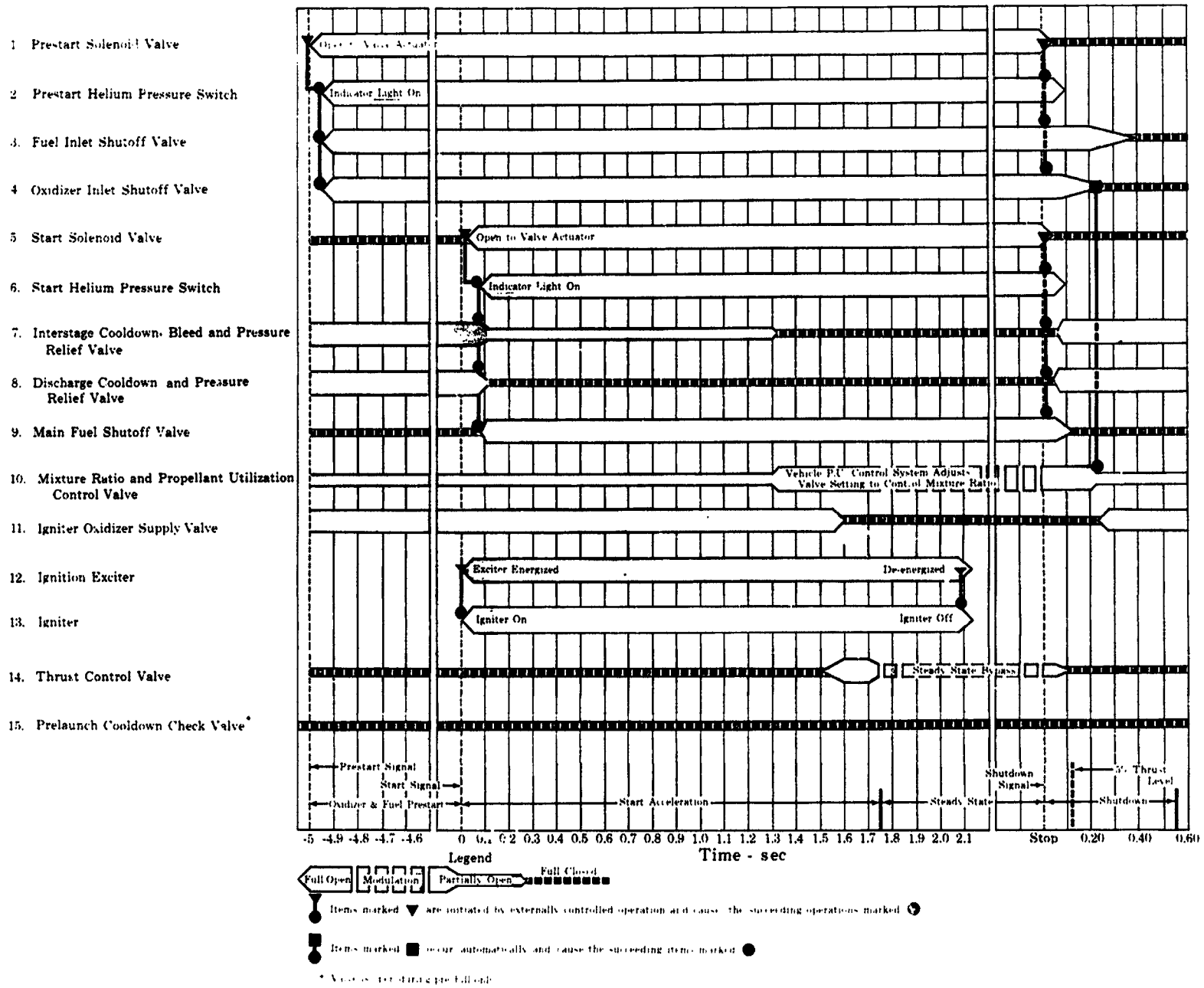

Figure V-4. Design Sequence of Engine Operation for RL10A-3-3 Engine

FD 7369C

SECTION VI
SCHEMATIC DRAWING

The propellant flow schematic for the RL10A-3-3 engine assembly is shown in figure VI-1.

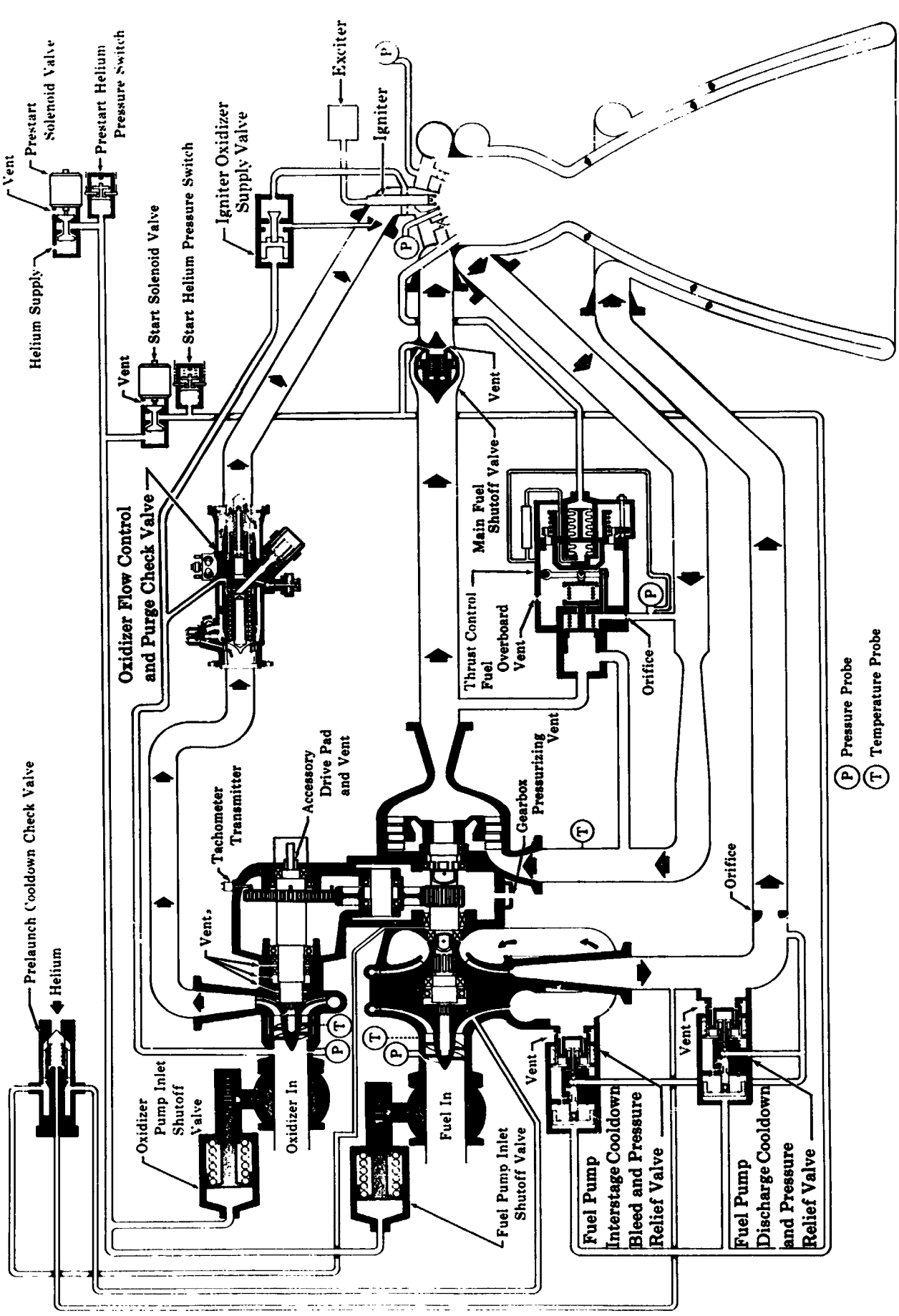

FD 7368C

Figure VI-1. Propellant Flow Schematic for RL10A-3-3 Engine

SECTION VII
MATERIALS GLOSSARY

The materials used in major engine components are listed in the following table.

Table VII-1. Materials Used in Major Engine Components

Component	Material	Type
Propellant Piping	Stainless steel tubing	PWA 770 (AISI 347)
Thrust Chamber Assembly		
Machined portion	Stainless steel forging	AMS 5646
Formed portion	Stainless steel sheet	AMS 5512
Reinforcing bands	Stainless steel sheet	AMS 5512
Porous injector face	Heat-resistant alloy wire	AMS 5794
Gimbal pintles	High-strength, stainless steel bar	AMS 5735
Gimbal pedestal and cone	Aluminum alloy forgings	AMS 4139
Brackets	Stainless steel sheet	AMS 5512
Turbopump		
Housings (all except*)	Aluminum alloy forgings	AMS 4130
Fuel pump gearbox housing*	Aluminum alloy casting	AMS 4215
Fuel impellers	Aluminum alloy forgings	AMS 4135
Oxidizer impellers	Stainless steel forging	AMS 5646
Turbine rotor	Aluminum alloy forging	AMS 4127
Shaft	High-strength, nickel alloy bar	AMS 5667
Gears	Carburizing steel	AMS 6260
Valves		
Housings		
Thrust control	Aluminum alloy casting	AMS 4215
Oxidizer flow control and pressure relief valve	Aluminum alloy forging	AMS 4127
Main fuel shutoff valve	Cast stainless steel	AMS 5362
Inlet valves	Aluminum casting	AMS 4217
Solenoid valves	Stainless steel forging	AMS 5646
Prelaunch cooldown check valve	Stainless steel bar	AMS 5646

Table VII-1. (Continued)

Component	Material	Type
Valves (continued)		
Cooldown valves	Aluminum bar and forging	AMS 4117 AMS 4127
Igniter oxidizer supply valve	High-strength stainless steel bar	AMS 5735
Springs	Stainless steel wire and nickel alloy wire	AMS 5688 AMS 5699
Bellows	Stainless steel sheet	AMS 5512 AMS 5525 PWA 767
	Copper Beryllium sheet	AMS 4532
Miscellaneous		
Fuel lines	Stainless steel tubing	AMS 5571
Gasket	Plastic (sheet) (film)	 AMS 3651 AMS 3652
Gaskets	Aluminum sheet	AMS 4001
Gaskets	Aluminum sheet	AMS 4025
Gaskets	Stainless steel sheet	AMS 5510
Plugs	Aluminum bar stock	AMS 4120
Flanges	Aluminum alloy forging	AMS 4127
Flanges	Stainless steel forging	AMS 5646
Cover	Aluminum casting	AMS 4027
Spring washers	Copper beryllium sheet	AMS 4532
Washers and clips	Stainless steel sheet	AMS 5510
Bracket	High-strength stainless steel sheet	AMS 5525
Tubes	Stainless steel tubing	AMS 5571
Rings and spacers	Stainless steel bar	AMS 5613
Bearings	Stainless steel bar and forging	AMS 5630
Plugs	Free machining stainless steel bar	AMS 5640
Miscellaneous small parts	Stainless steel bar and forgings	AMS 5646 AMS 5639
	Stainless steel forgings	AMS 5646

Table VII-1. (Continued)

Component	Material	Type
Miscellaneous (Continued)		
Nuts	Stainless steel bar and forgings	AMS 5735
Spacers, liners	High-strength, nickel alloy bar and forgings	AMS 5668
Safety wire	Nickel alloy wire	AMS 5685
Fasteners	High-strength, stainless steel bar	AMS 5735
Threaded inserts	Stainless steel wire	AMS 7245

SECTION VIII
ENGINE PARTS LIST

The RL10A-3-3 engine parts list is a part of this design report. The alphabetical parts list, P&WA Form No. PWA F-1351 A-F, is revised as engineering changes occur; the numerical parts list, P&WA Form No. PWA-F-1353-F, is issued on a monthly basis.

A current RL10A-3-3 engine parts list is not submitted in this report but copies are available at Pratt & Whitney Aircraft FRDC, and will be transmitted upon request.

SECTION IX
PROPELLANTS AND ANCILLARY FLUIDS
PRESSURE AND TEMPERATURE REQUIREMENTS

The estimated liquid hydrogen conditions required at fuel pump inlet are shown in figure IX-1. The estimated liquid oxygen conditions required at oxidizer pump inlet are shown in figure IX-2.

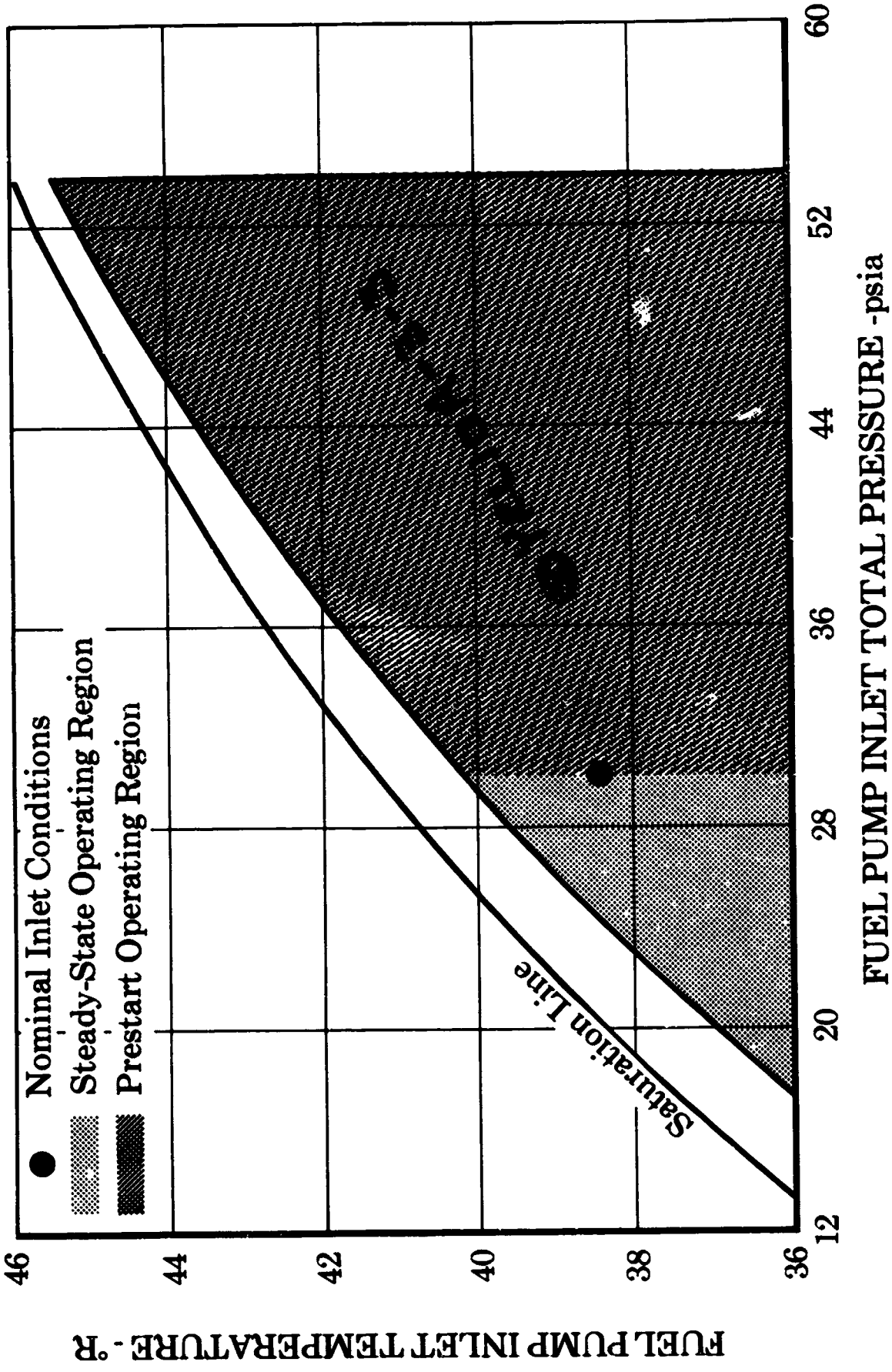

FD 10836A

Figure IX-1. Estimated Liquid Hydrogen Conditions Required at Fuel Pump Inlet

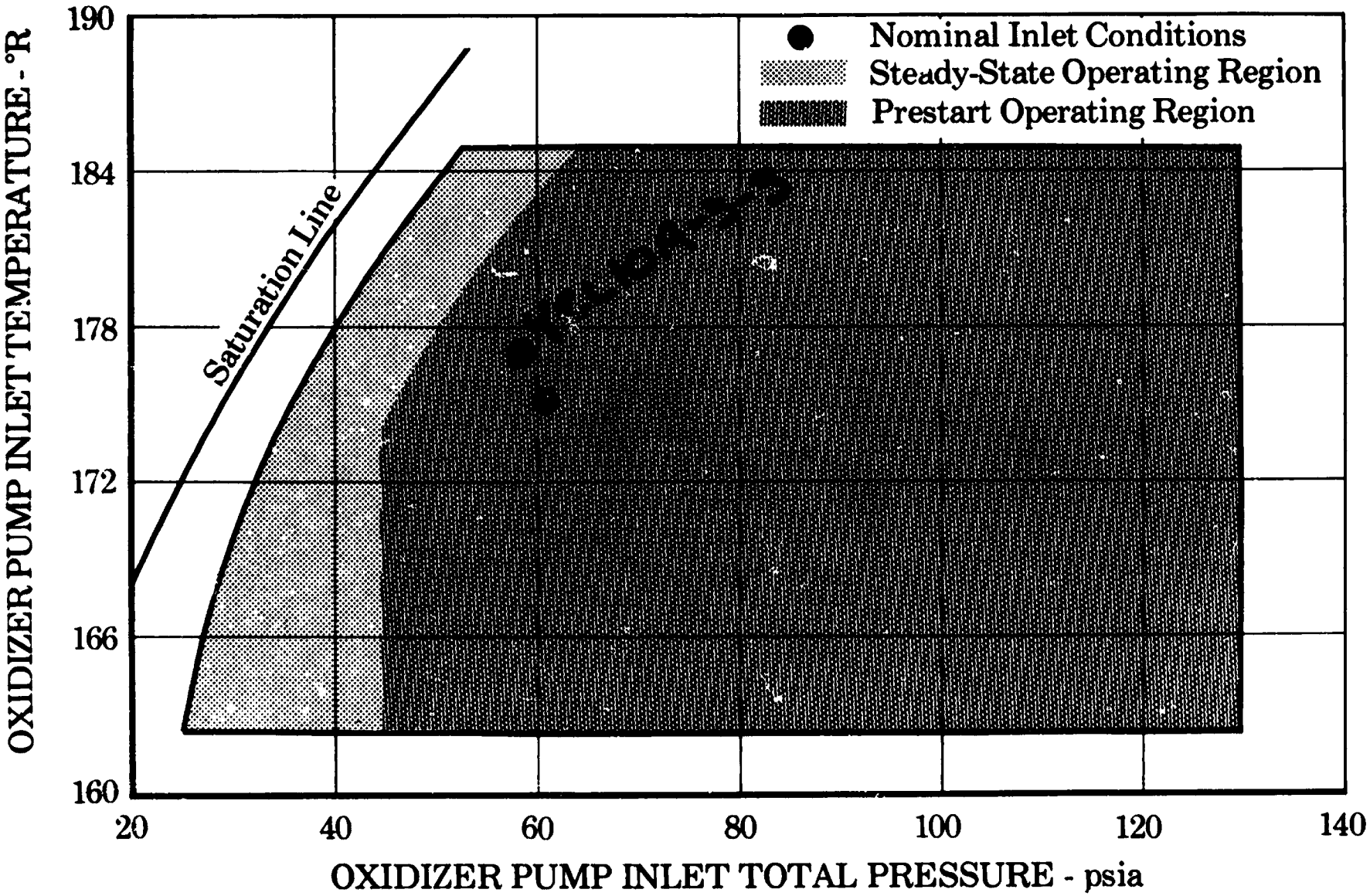

Figure IX-2. Estimated Liquid Oxygen Conditions Required at Oxidizer Pump Inlet

FD 10768A

SECTION X
MALFUNCTION ANALYSIS

A. GENERAL

The RL10A-3-3 engine was specifically designed to minimize the effects of possible propulsion system malfunction on engine performance and durability. An investigation and analysis was made of these malfunctions and their effect on the RL10A-3-3 engine. Pratt & Whitney Aircraft Model Specification 2265A requires an analysis of certain malfunctions when they occur during stable engine operation. The analysis was extended to investigate each malfunction for its effect if it had occurred at each phase of engine operation, as follows:

1. Prestart
2. Acceleration
3. Steady-state or stable engine operation
4. Shutdown.

Analysis of the following malfunctions is required by the Model Specification:

1. Failure of electrical supply to prestart solenoid
2. Failure of electrical supply to start solenoid
3. Failure or shutoff of the helium supply
4. Failure or shutoff of the oxidizer supply
5. Failure or shutoff of the fuel supply
6. Adjustment failure of propellant utilization valve.

This report also covers the following malfunctions that are not prescribed in the Model Specification:

1. Failure of engine electrical supply
2. Failure or shutoff of the igniter electrical supply
3. Electrical supply variations in excess of specification limits
4. Helium supply variations in excess of specification limits
5. Propellant inlet pressure and temperature outside specification limits
6. Ambient pressure and temperature outside specification limits
7. Failure of thrust control
8. Closing of main fuel shutoff valve.

It was assumed that the malfunction under discussion in each section occurs independently of any other malfunction.

B. RESULTS - MALFUNCTIONS REQUIRED BY MODEL SPECIFICATION 2265A

1. Failure of Electrical Supply to Prestart Solenoid

a. Prestart

Engine returned to shutdown condition. No effect on subsequent operation if electrical supply is restored and adequate cooldown time is allowed.

b. Acceleration

Engine shutdown sequence will be normal but system response time will increase slightly. If the electrical supply is restored and the normal starting sequence is followed, the engine will be capable of normal operation.

c. Steady-State

Engine shutdown will occur with a slight increase in turbopump speed. If the electrical supply is restored and the normal starting sequence is followed, the engine will be capable of normal operation.

d. Shutdown

Normal for this phase. No effect on subsequent operation if electrical supply is restored.

2. Failure of Electrical Supply to Start Solenoid

a. Prestart

No effect. The engine will remain in the prestart mode.

b. Acceleration

The main fuel shutoff valve will fail to open and fuel will be prevented from entering the combustion chamber. The engine will not start, but will remain in the prestart or cooldown phase with propellants lost overboard until the prestart signal is removed. If the electrical supply is restored, the engine will be capable of normal operation. The effect of a failure during the latter portion of the acceleration phase is similar to failure during the steady-state phase on a reduced scale. (Refer to paragraph 2c, following.)

If the start signal follows the prestart signal too closely (less than the minimum specified cooldown time), insufficient pump cooldown will prevent the engine from accelerating normally and will cause cavitation, with the engine operating erratically at low thrust levels and high mixture ratios. Under these conditions, there is a strong possibility that thrust chamber tube

wall burnout will occur. If tube wall burnout does not occur, the pumps will eventually cool down, and the engine will accelerate to rated thrust. Starting impulse variation between engines could become excessive and present severe guidance problems. If tube wall burnout does not occur, the engine will retain restart capability.

c. Steady-State

The engine will shut down in a normal manner, returning to the cooldown phase with propellants lost overboard until the prestart signal is removed. If the electrical supply is restored and the normal starting sequence is followed, the engine will be capable of normal operation.

d. Shutdown

Normal for this phase. No effect on subsequent operation if electrical supply is restored.

3. Failure or Shutoff of the Helium Supply

a. Prestart

Inlet valves will remain closed, and the engine will not cool down. If the helium supply is restored, the engine will be capable of normal operation.

b. Acceleration

Due to a rapid loss of helium pressure, the engine will remain shut down, or shut down normally. If the helium supply is restored and the normal starting sequence is followed, the engine will be capable of normal operation.

c. Steady-State

Due to a rapid loss of helium pressure, the engine will shut down in a normal manner. If the helium supply is restored and the normal starting sequence is followed, the engine will restart, operate, and shut down normally.

d. Shutdown

Normal for this phase. No effect on subsequent operation if the helium supply is restored.

4. Failure or Shutoff of the Oxidizer Supply

a. Prestart

The oxidizer pump, valves, and injector will not cool down. Fuel will flow overboard through the cooldown valves. If the oxidizer supply is restored

and the specified cooldown time allowed, the engine will start, operate, shut down, and restart normally.

b. Acceleration

Combustion will not occur. The turbopump will accelerate to approximately design speed due to residual heat in the thrust chamber, and then decelerate immediately. Fuel will flow overboard through the thrust chamber until the shutdown signal is given. If the oxidizer supply is restored, the specified cooldown time is allowed, and the chamber temperature is restored to a level within the specification limits; the engine will start, operate, shut down, and restart normally.

c. Steady-State

Propellant combustion will be terminated due to loss of oxidizer supply, and chamber pressure will decay to a constant pressure as fuel continues to flow overboard through the thrust chamber. The turbopump will overspeed and then decelerate as the turbine inlet temperature drops from its operating temperature to fuel pump inlet temperature. If the oxidizer supply is restored and other conditions are within specification limits, the engine will restart, operate, and shut down in a normal manner.

d. Shutdown

Normal for this phase. No effect on subsequent operation if oxidizer supply is restored.

5. Failure or Shutoff of the Fuel Supply

a. Prestart

The fuel pump will not cool down. Oxidizer will flow overboard through the thrust chamber, which is normal for this phase of operation. No effect on subsequent operation if the fuel supply is restored and the specified cool-down time is allowed.

b. Acceleration

The engine will not start, and oxidizer will continue to flow overboard through the thrust chamber. No effect on subsequent operation if the fuel supply is restored and the specified cooldown time is allowed. The effects of a failure during the latter portion of the acceleration phase are similar, though on a reduced scale, to failure during the steady-state phase. (Refer to the following paragraph.)

c. Steady-State

The turbopump will first overspeed; then decelerate as a function of the rate at which fuel is lost. If a complete loss of fuel occurs, the fuel pump will cavitate and combustion will terminate. Pump inlet pressure will increase.

d. Shutdown

Normal for this phase. No effect on subsequent operation if the fuel supply is restored.

6. Adjustment Failure of Propellant Utilization Valve

The range of the valve setting is governed by the adjustment stops that can limit the oxidizer fuel ratio setting from 4.4 to 5.6. The engine is therefore subjected to operation under a regulated mixture ratio. Failure of the adjustment mechanism may render the valve incapable of controlling the utilization of propellant. In the event of an adjustment mechanism failure, the engine will operate without propellant utilization control at a high oxidizer-to-fuel ratio. Prestart and start will be normal because during early transients the flow is governed by the inlet side of the valve which is independent of the adjustment mechanism. During acceleration, steady-state, and shutdown, the engine will operate normally, but at a high oxidizer-to-fuel ratio.

C. RESULTS - MALFUNCTIONS NOT REQUIRED BY MODEL SPECIFICATION 2265A

1. Failure of Engine Electrical Supply

a. Prestart

Engine remains shut down or will shut down normally because the solenoid valves control the helium supply to the engine. No effect on subsequent operation if the electrical supply is restored.

b. Acceleration

Engine will remain shut down, or will shut down normally. No effect on subsequent operation if electrical supply is restored and the normal starting sequence is followed.

c. Steady-State

The results are the same as described for the acceleration phase in the preceding paragraph.

d. Shutdown

Normal for this phase. No effect on subsequent operation if electrical supply is restored.

2. Failure or Shutoff of the Igniter Electrical Supply

a. Prestart

Normal for this phase of engine operation. No effect on subsequent engine operation if electrical supply is restored.

b. Acceleration

Failure of the igniter electrical supply after a combustible mixture has been ingited will not affect subsequent engine operation if the electrical supply is restored prior to the next acceleration phase. Failure of the igniter prior to the ignition of a combustible mixture will cause the turbopump to accelerate to approximately design speed -- due to residual heat in the thrust chamber -- and then decelerate immediately. Propellants will flow overboard through the thrust chamber and the interstage cooldown valves as fuel pump discharge pressure drops. The chamber pressure will be low and its temperature will rapidly approach propellant temperatures because of the fuel flow through the tubes and combustion chamber. If the electrical supply is returned while the thrust chamber is filled with propellant, the engine will experience a hard start. The hard start may permanently damage the chamber, preventing future successful engine operation.

c. Steady-State

Normal for this phase of engine operation. No effect on subsequent engine operation if the electrical supply is restored.

d. Shutdown

Normal for this phase of engine operation. No effect on subsequent engine operation if the electrical supply is restored.

3. Electrical Supply Variations in Excess of Specifications

High voltage levels may burn out the igniter or the solenoids. The result would be as described above for failure of each component. Low voltage levels are discussed below for each phase of engine operation.

a. Prestart

No effect if the prestart solenoid valve opens.

b. Acceleration

The safe operating limits for voltage supply to the igniter are 20 volts to 30 volts dc. A low voltage level will decrease igniter firing rate and strength of spark, which could prevent ignition.

c. Steady-State

No effect if the solenoid valves remain open.

d. Shutdown

Normal for this phase. No effect on subsequent engine operation if the electrical supply is within specification limits.

4. Helium Supply Variations in Excess of Specifications

Helium supply pressure above the Model Specification limits will shorten the life of the control system bellows. Helium supply pressures well below Model Specification limits will have the same effect as failure of the helium supply. (See paragraph B3 in this section.) Specific effects for moderate pressure variations below specification limits are given below.

a. Prestart

Helium supply pressure below 250 psia will prevent the inlet valves from operating, and will result in the inability to cool down the pumps and start the engine. If the supply is restored and the specified cooldown time is allowed, the engine will start, operate, and shut down normally.

b. Acceleration

A helium supply pressure below 350 psia may result in the fuel pump bleed valves opening as the engine tries to accelerate. If the helium supply is restored to a level within the specified limits after pump discharge pressure has decayed, the engine will accelerate to rated thrust conditions, operate and shut down normally, and retain restart capabilities.

c. Steady-State

At approximately 325 psi, the cooldown valves will open, with a resulting increase in mixture ratio and a reduction in power, thrust, and rpm. Under these conditions, there is a possibility of tube wall or injector burnout. If the helium supply is restored to a level within the specified limits and no damage was sustained by the tubes or injector, the engine will be capable of normal operation following normal cooldown sequence.

d. Shutdown

No effect, as the helium supply is shut off during this phase.

5. Propellant Inlet Pressure and Temperature Outside Specification Limits

a. Prestart

Low propellant inlet pressures will result in insufficient cooldown flows and inability of the engine to accelerate properly. Inlet temperature variations above the specified maximum allowable will tend to reduce the efficiency of pump cooldown. If the variation becomes excessive, insufficient pump cooldown will occur, which will result in pump cavitation during the acceleration transient. The effects of pump cavitation are described in the following paragraph. If the pressures and temperatures are restored to levels within specification limits and if the specified cooldown time is allowed, the engine will start, operate, and shut down normally.

b. Acceleration

An oxidizer supply pressure below specification limits, an oxidizer supply temperature above specification limits, or a fuel supply pressure above specification limits will cause a higher than normal acceleration rate, but will probably not damage the engine.

An oxidizer inlet pressure above specification limits, a fuel inlet pressure below specification limits, or a fuel inlet temperature above specification limits will cause a lower than normal acceleration rate and may result in tube wall burnout. Low fuel pressures and high fuel temperatures reduce acceleration rates by reducing the energy input to the turbine.

Propellant temperatures above specification limits and pressures below specification limits may cause pump cavitation, resulting in erratic acceleration and the possible occurrence of tube wall burnout.

DIFFERENT THAN YLLDA-8.8

c. Steady-State

Propellant inlet pressures below specification limits and inlet temperatures above specification limits could cause pump cavitation, resulting in erratic engine operation. If cavitation is more severe in the fuel pump than in the oxidizer pump, the engine will operate at a high mixture ratio, and tube wall burnout will probably occur.

An oxidizer pressure higher than the specification limit will cause the engine to operate at a high mixture ratio and may result in tube wall burnout.

If tube wall burnout does not occur and the propellant inlet temperatures and pressures are restored to levels within specification limits, the engine will continue to operate normally.

DIFFERENT THAN 1RL10A-3-3

d. Shutdown

No effect, as the propellants are not supplied to the engine during this phase.

6. Ambient Pressure and Temperature Outside Specification Limits

a. Prestart

Ambient pressures outside of the specified maximum allowable will cause inadequate cooldown of engines. Ambient temperatures above the specified limits will have no appreciable effect unless metal temperatures exceed 580°R, which could cause inadequate cooldown. Inadequate cooldown may cause pump cavitation during the acceleration phase. The effects of pump cavitation are described in paragraph C5b. If the ambient pressures and temperatures are returned to normal and if adequate cooldown is provided, the engine will start, operate, and shut down normally.

b. Acceleration

The "bootstrap" capability of the engine is dependent on both fuel pump inlet pressure and ambient pressure. The engine may not start successfully at ambient pressures above 3 psia. If ignition occurs, the engine may experience a hard start with the possibility of a tube wall burnout.

Chamber temperatures in excess of specification limits will cause high overshoot in turbine speed and system pressures. Excessive pressure surges could result in structural failure, and high turbine speeds will cause pump cavitation, the effects of which are described in paragraph C5b.

If tube wall burnout or pump cavitation does not occur, and if the ambient pressures and temperatures are returned to normal, the engine will start, operate, and shut down normally.

c. Steady-State

Ambient temperatures outside specification limits will not affect this phase of engine operation.

Ambient pressures above approximately 5 psia will suppress nozzle expansion, thereby causing flow separation from the nozzle walls. Oblique shock waves off the nozzle walls destroy the boundary layer and produce hot spots at the separation points. If prolonged, this condition could cause tube wall burnout. If burnout does not occur and if ambient pressure is returned to normal, the engine will operate and shut down normally with restart capability.

d. Shutodwn

No effect will be felt.

7. Failure of the Thrust Control

a. Prestart

No effect, as thrust control operation is not required during this phase of engine operation.

b. Acceleration

If the thrust control fails in the full-open position, the engine will not accelerate to the rated thrust level. If the thrust control fails in the full-closed position, the engine will overshoot excessively at the peak of the acceleration transient. If no structural damage occurs due to the high overshoot, the engine will retain restart capability.

c. Steady-State

If the thrust control fails and remains in the closed position, the engine will operate above the rated thrust level at a low mixture ratio. If the thrust control fails and remains in the full-open position, the engine will operate at a low thrust level and a high mixture ratio. Tube wall burnout may occur, which would render the engine inoperative. If the thrust control sticks in a partially open position, the engine may operate near rated thrust, depending on the amount of bypass area exposed, the chamber temperature, and the fuel pump inlet pressure. If tube wall burnout does not occur, the engine can be shut down, restarted, and operated normally.

d. Shutdown

No effect, as thrust control operation is not required during this phase.

8. Closing of the Main Fuel Shutoff Valve

a. Prestart

No effect. Normal for this phase of engine operation.

b. Acceleration

Fuel will be prevented from entering the combustion chamber, and the engine will not start. Propellants will be lost overboard until the prestart signal is removed. The effect of a failure during the latter portion of the acceleration phase is similar to failure during the steady-state phase.

c. Steady-State

Flameout will occur and the turbine will rapidly decelerate due to the shutoff of the fuel system, and the fuel pump inlet pressure will rise. If the pump inlet pressure reaches 450 psi during this transient, the pump inlet housing may rupture. The interstage cooldown valve will open when fuel pump discharge pressure drops below 170 psia, and propellants will continue to flow overboard until the prestart signal is removed.

d. Shutdown

If the main fuel shutoff valve prematurely closes during the shutdown transient, the effect will be the same as in the preceding paragraph, except during the latter portion of the transient when the cooldown valves are open. Failure after the cooldown valves are open permits a normal shutdown.

APPENDIX A
STRESS DATA

Stresses of major structural components of the engine are listed in this appendix. The data include the following:

1. Load characteristics of RL10A-3-3 gears (Refer to table A-1.)
2. Gimbal stresses (Refer to table A-2.)
3. Propellant injector stresses (Refer to table A-3.)
4. Thrust chamber stresses (See figure A-1.)
5. Fuel pump impeller stresses (See figures A-2 through A-5.)
6. Turbine rotor stresses. (See figure A-6.)

Table A-1. Load Characteristics of RL10A-3-3 Gears

Characteristics	RL10A-3-3 Shaft Gear and Idler Gear Mesh	
	Fuel Pump	Oxidizer Pump
Pitch line velocity, ft/min	15,570	15,570
Sliding velocity (max), ft/min	4,020	2,240
Tangential load (continuous), lb	295	295
Tangential load (momentary), lb	427	427
Hertz stress (continuous), psi	76,900	73,000
Hertz stress (momentary), psi	96,000	91,200
Dynamic load (continuous), lb	1,545	1,460
Beam fatigue strength, lb	1,865	1,857
Dynamic load (momentary), lb	1,816	1,730
Static beam strength, lb	3,849	3,832

Table A-2. Gimbal Stresses

	Maximum Stresses, psi	Allowable Stresses, psi
Pins	$S_{bending} = 64,500$	$S_{bending} = 85,000$ (0.2% yield)
Disk	$S_{bending} = 15,900$	$S_{bending} = 85,000$
Cone	$S_{combined} = 46,200$	$S_{combined} = 65,000$

Overall Gimbal Strength

Compression = 21,500 lb
Torque = 7500 lb-in.

Table A-3. Propellant Injector Stresses*

	Calculated Stresses, psi	Allowable Stresses, psi
Cone No. 1		
Bending stress	8,000	57,000
Weld shear stress	10,000	13,000
Cone No. 2		
Bending stress	70,000	82,500
Tensile stress in post connecting cone No. 1	28,000	55,000
Tensile stress in post connecting cone No. 3	18,400	55,000
Cone No. 3		
Bending stress	70,000	82,500
Weld shear stress	13,000	30,000

*See figure I-18 for cone locations.

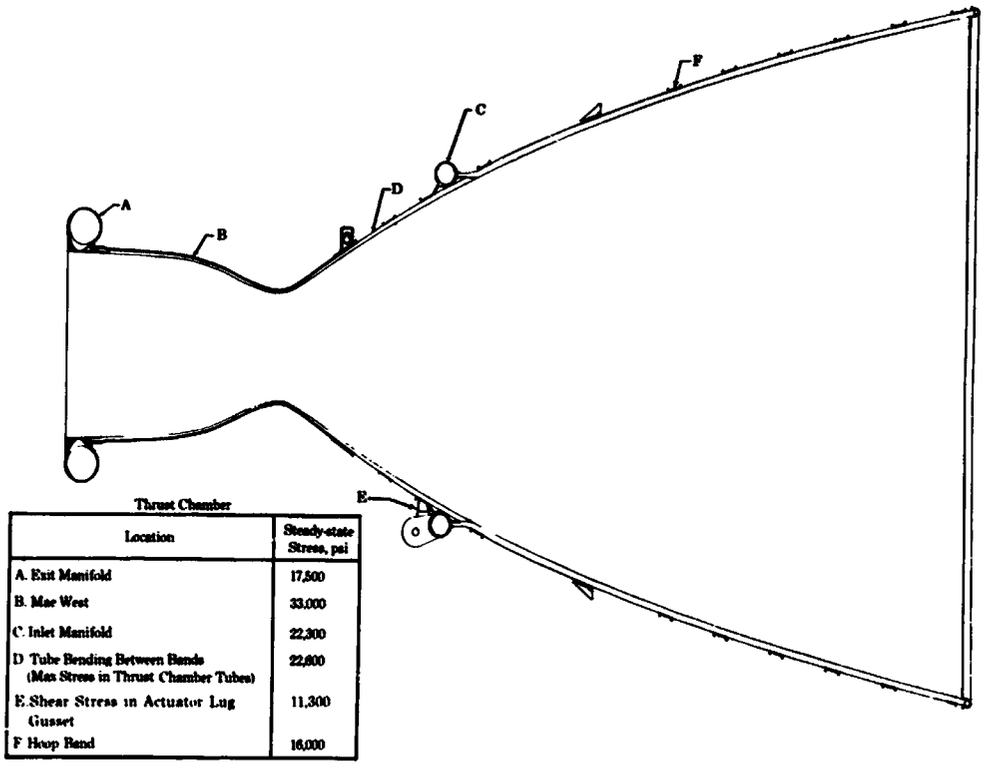

Figure A-1. Calculated RL10A-3-3 Thrust Chamber Stresses FD 1553C

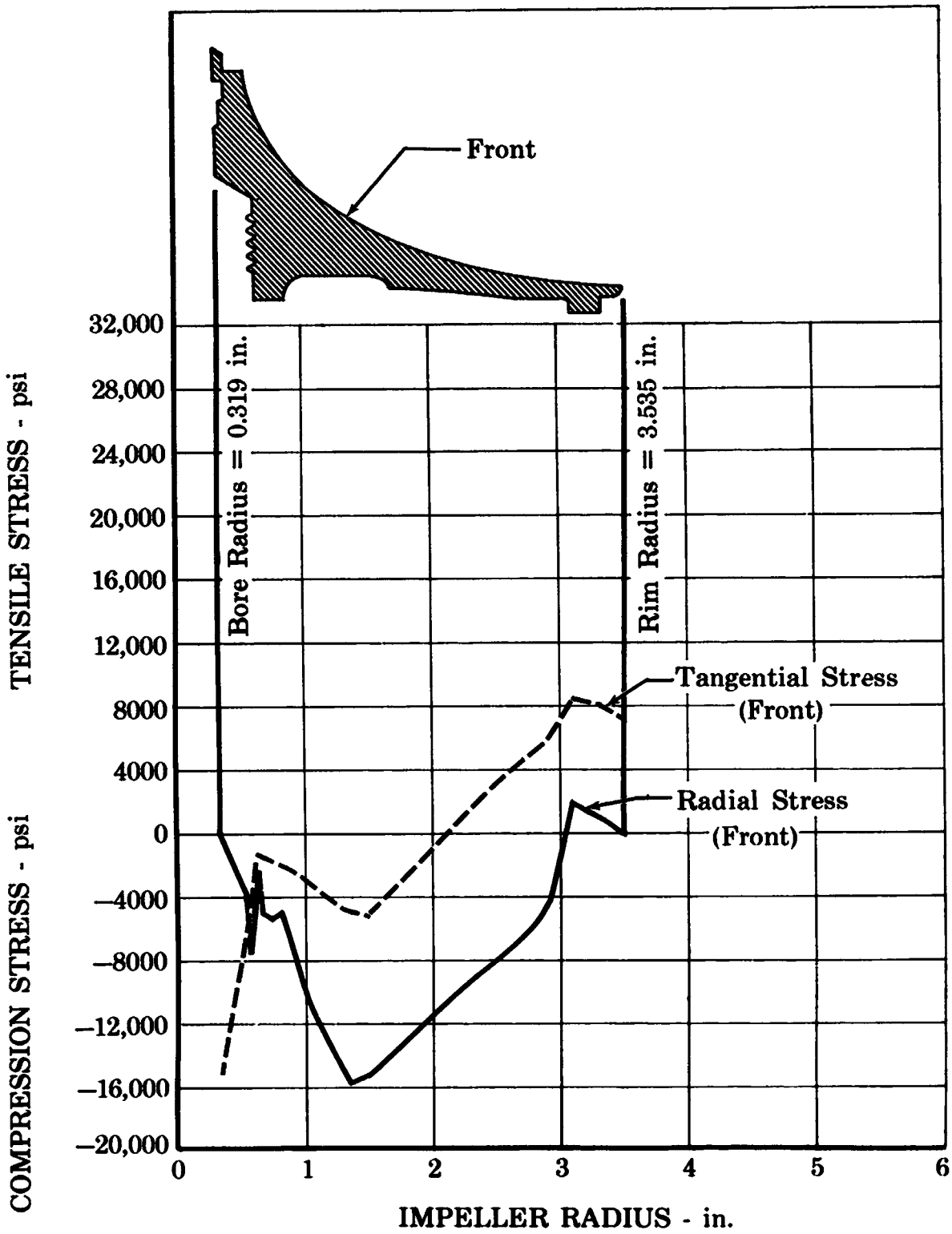

Figure A-2. Calculated First-Stage Fuel Pump Impeller Stresses (Front Face)

FD 10769

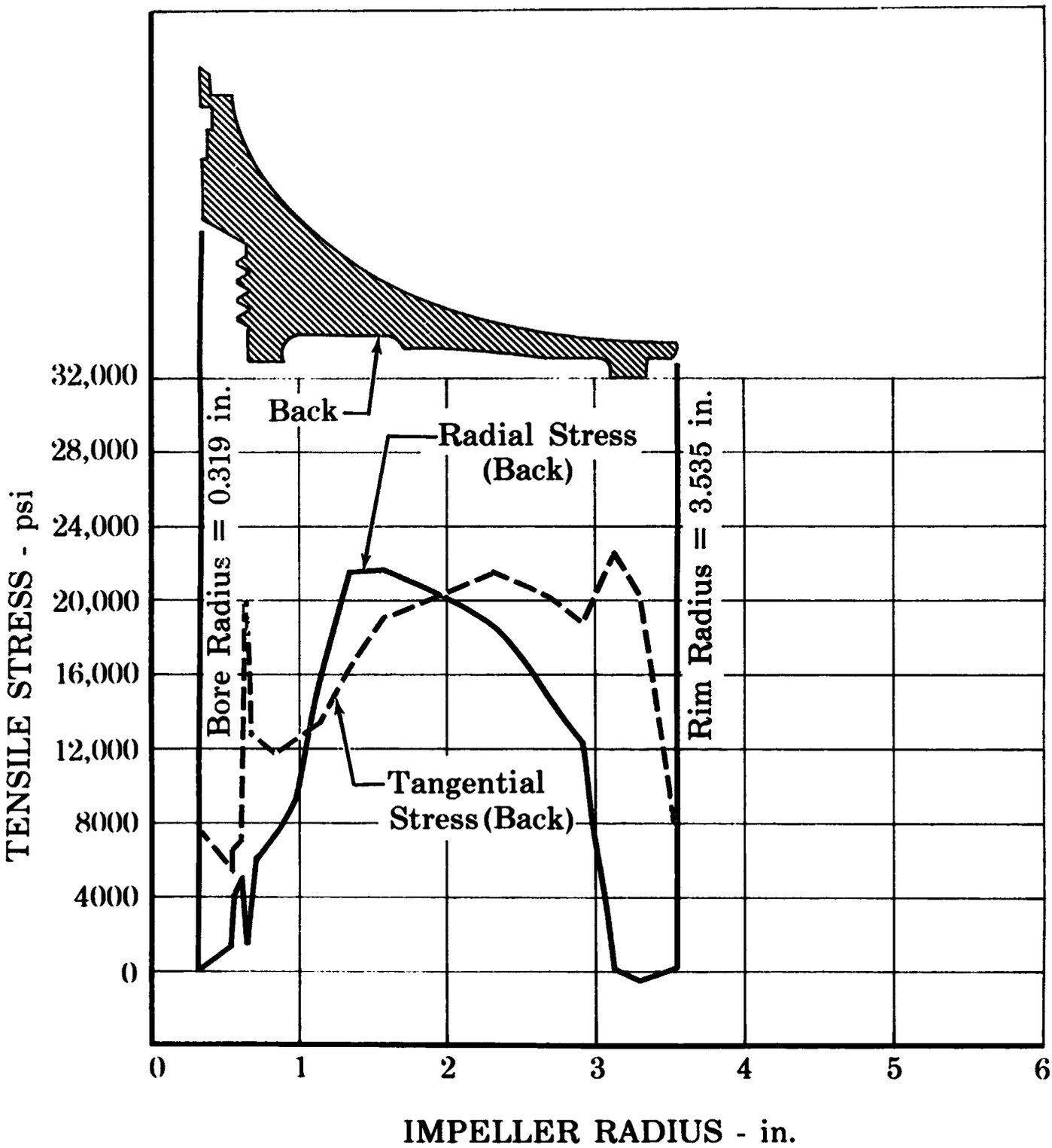

Figure A-3. Calculated First-Stage Fuel Pump Impeller Stresses (Back Face) FD 10833

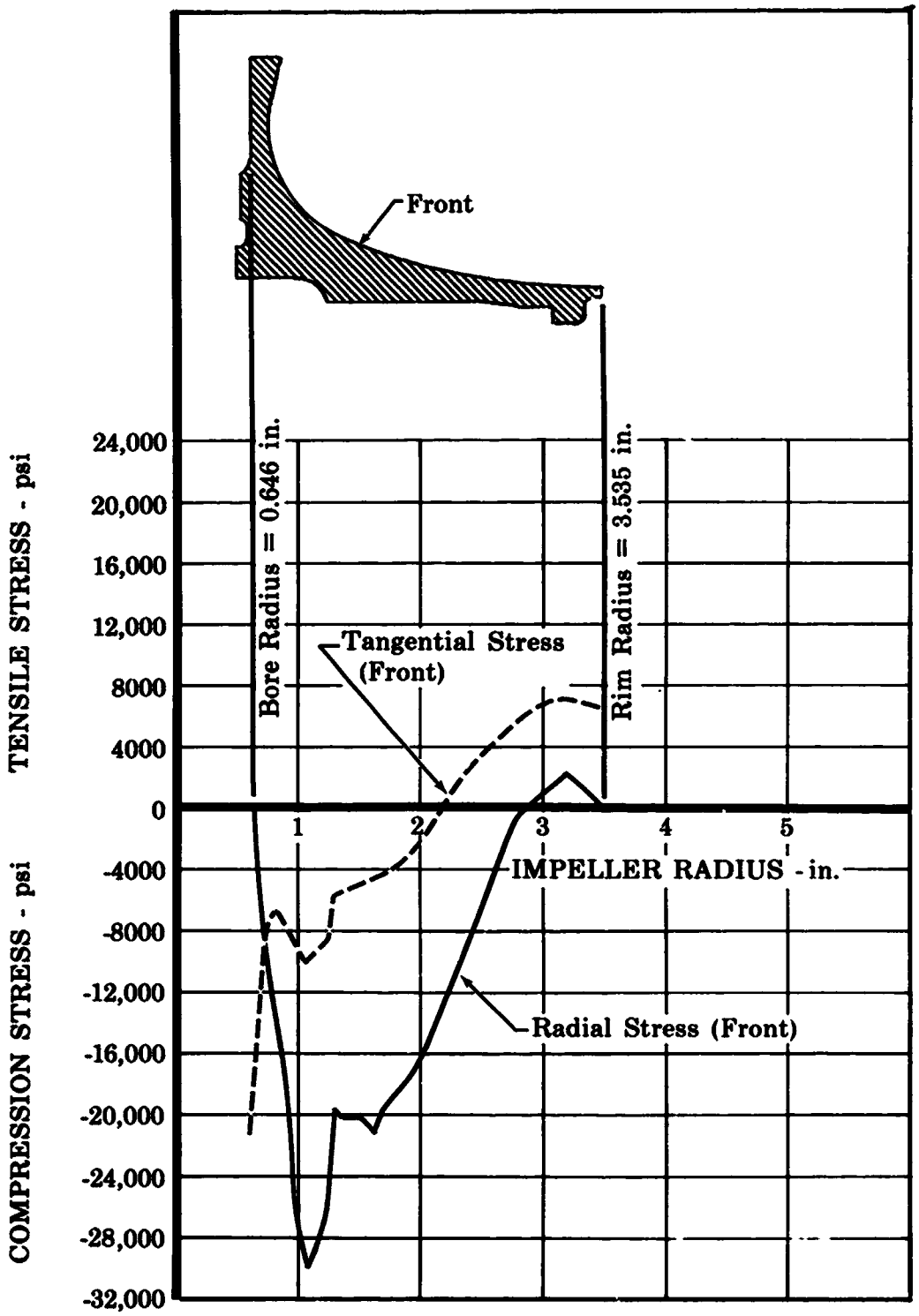

Figure A-4. Calculated Second-Stage Fuel Pump Impeller Stresses (Front Face) FD 10958

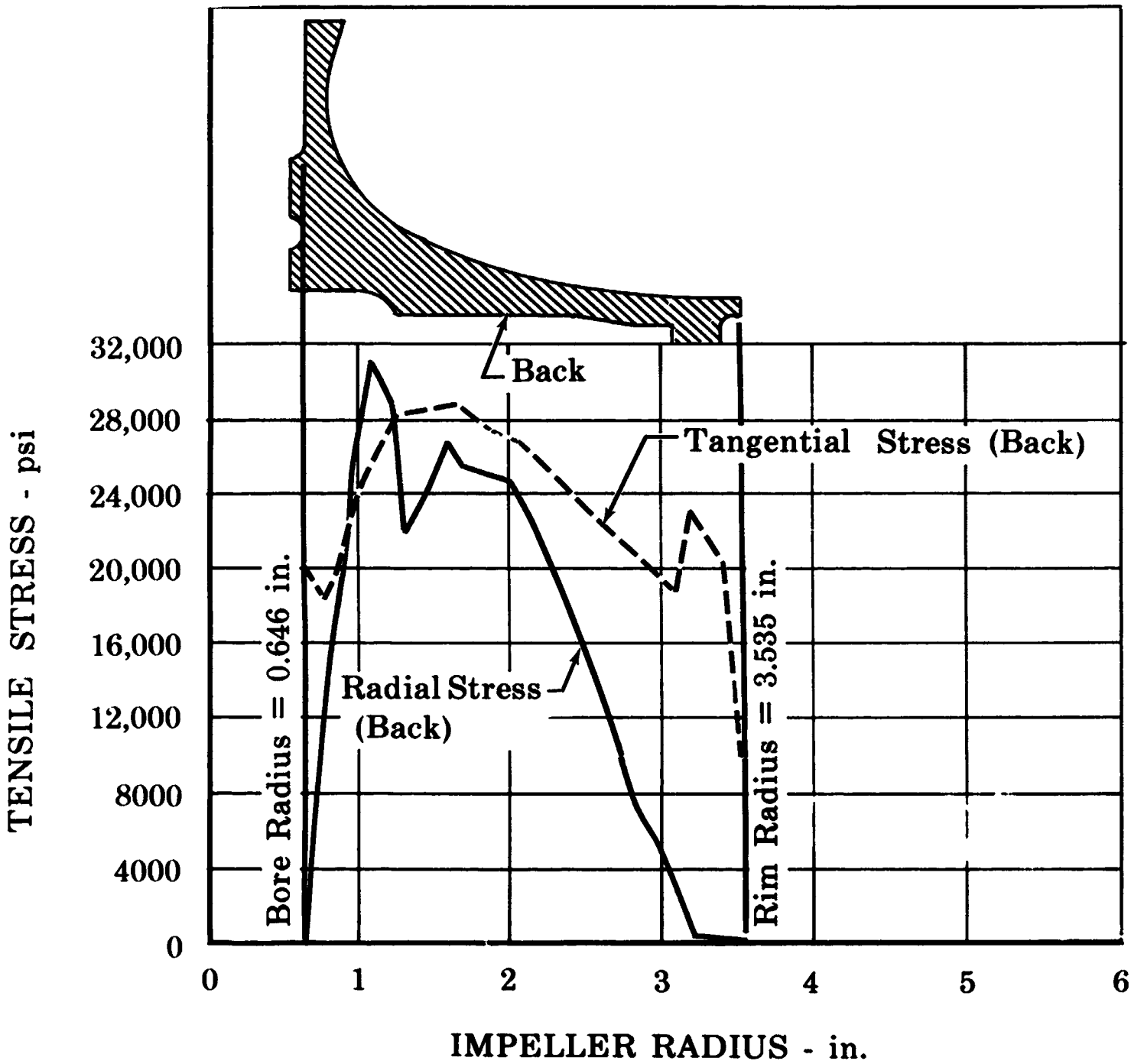

Figure A-5. Calculated Second-Stage Fuel Pump Impeller Stresses (Back Face) FD 10957

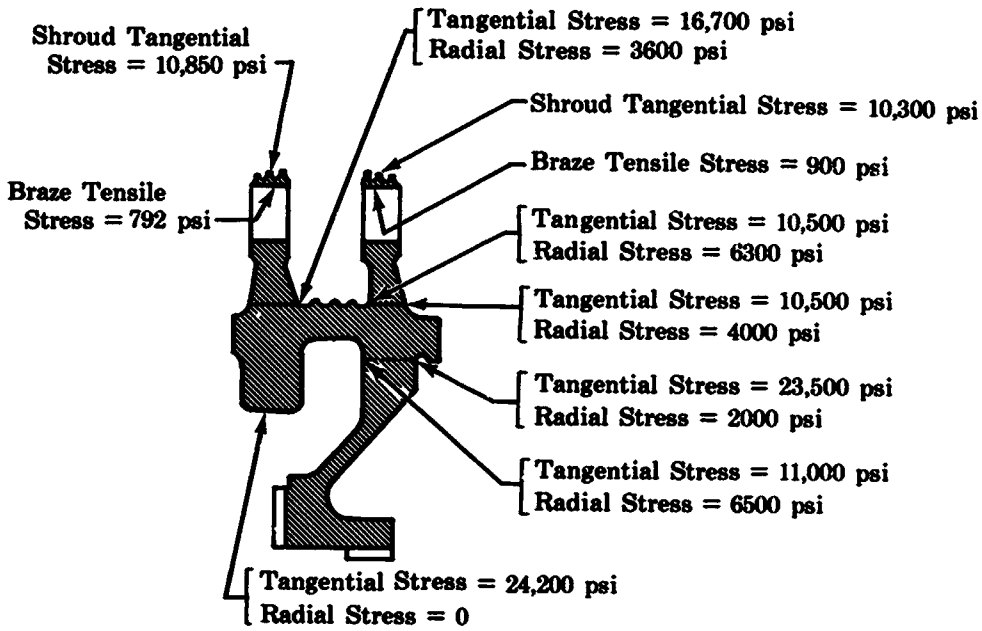

Figure A-6. Turbine Rotor Stresses Calculated at 33,020 rpm, Maximum Steady-State Operation FD 10956

APPENDIX B
RL10A-3-3 TURBOPUMP DATA

A. TURBOPUMP BALANCING DATA

1. Fuel Pump

The fuel pump impellers and turbine rotor are statically balanced within 0.001 oz-in. The assembly is then dynamically balanced within 0.002 oz-in. at 5000 rpm. Total balancing time on bearings may not exceed 30 minutes.

2. Oxidizer Pump

The inducer and impeller are statically balanced within 0.001 oz-in. The oxidizer pump shaft is dynamically balanced on centers in detail.

3. Idler Gear

The idler gear is statically balanced to within 0.003 oz-in.

B. PERFORMANCE DATA

The following curves on turbopump performance are included in this appendix:

Figure B-1. RL10A-3-3 Fuel Pump Predicted Performance
Figure B-2. RL10A-3-3 Fuel Pump Predicted Pressure at 30,250 rpm
Figure B-3. RL10A-3-3 Oxidizer Pump Predicted Performance
Figure B-4. RL10A-3-3 Oxidizer Pump Predicted Pressure at 12,100 rpm
Figure B-5. RL10A-3-3 Predicted Turbine Efficiency.

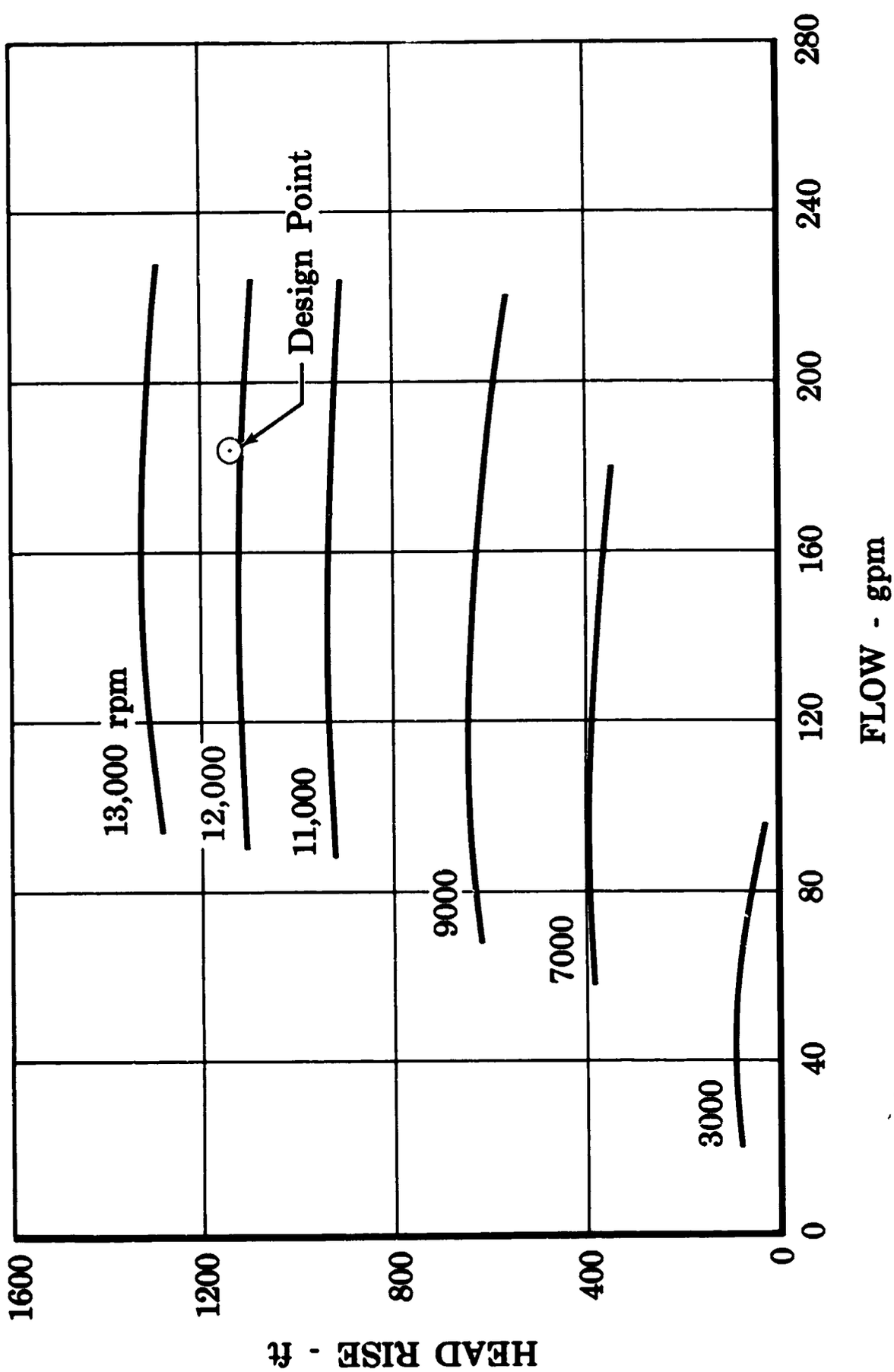

FD 15029

Figure B-1. RL10A-3-3 ~~Fuel~~ Pump Predicted Performance

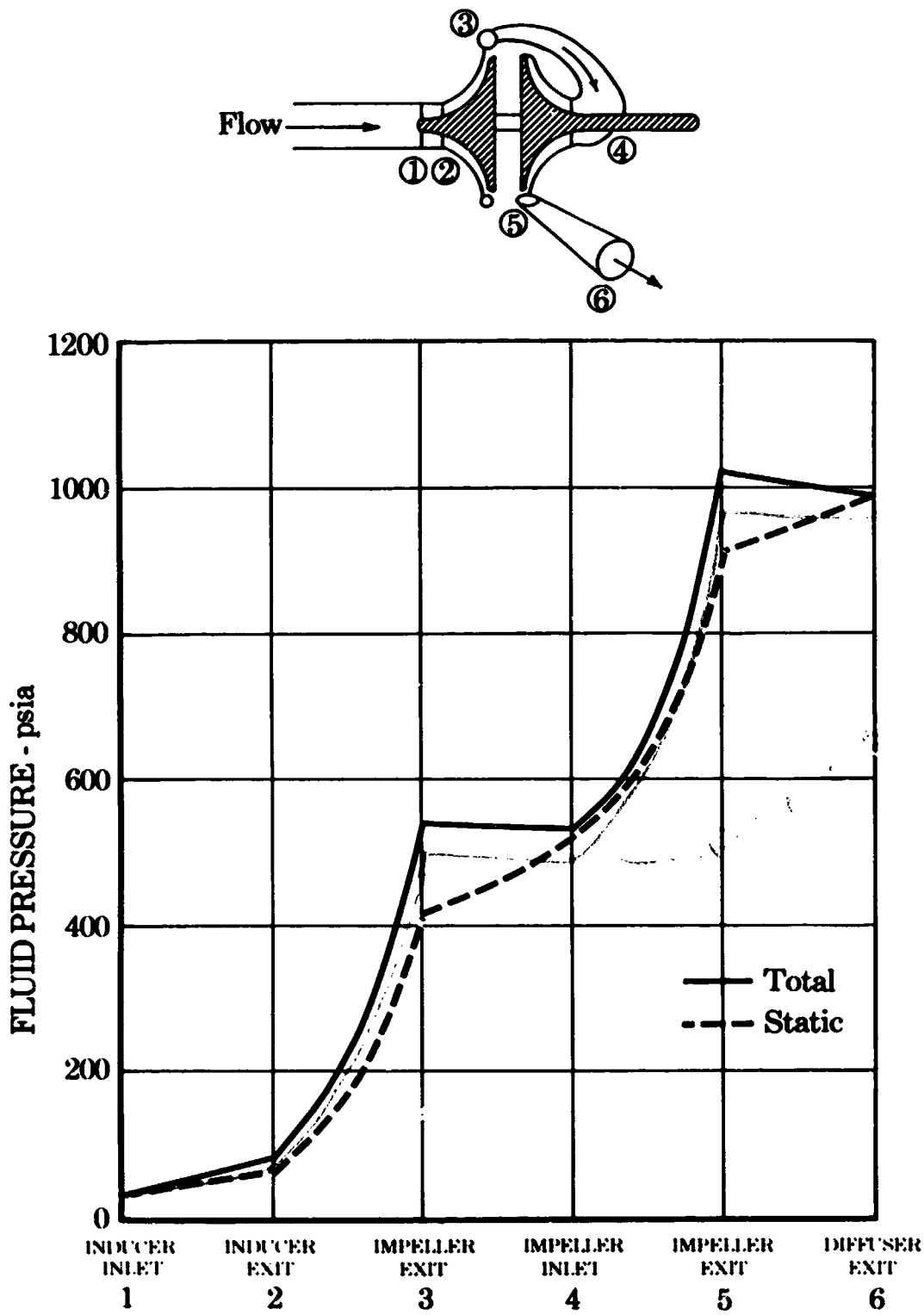

Figure B-2. RL10A-3-3 Fuel Pump Predicted Pressure at 30,250 rpm

FD 15032

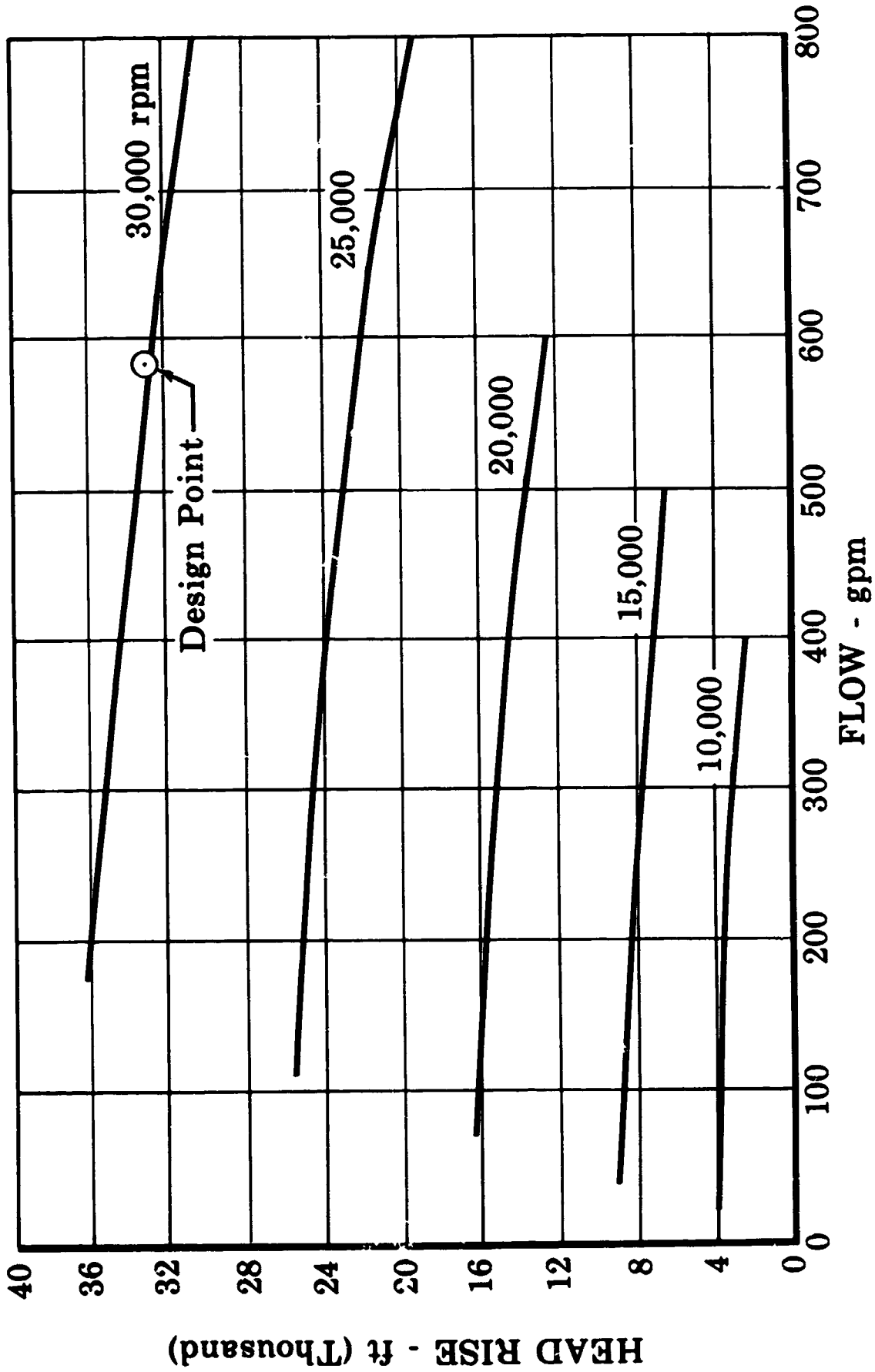

FD 15031

Figure B-3. RL10A-3-3 ~~Oxidizer~~ Pump Predicted Performance

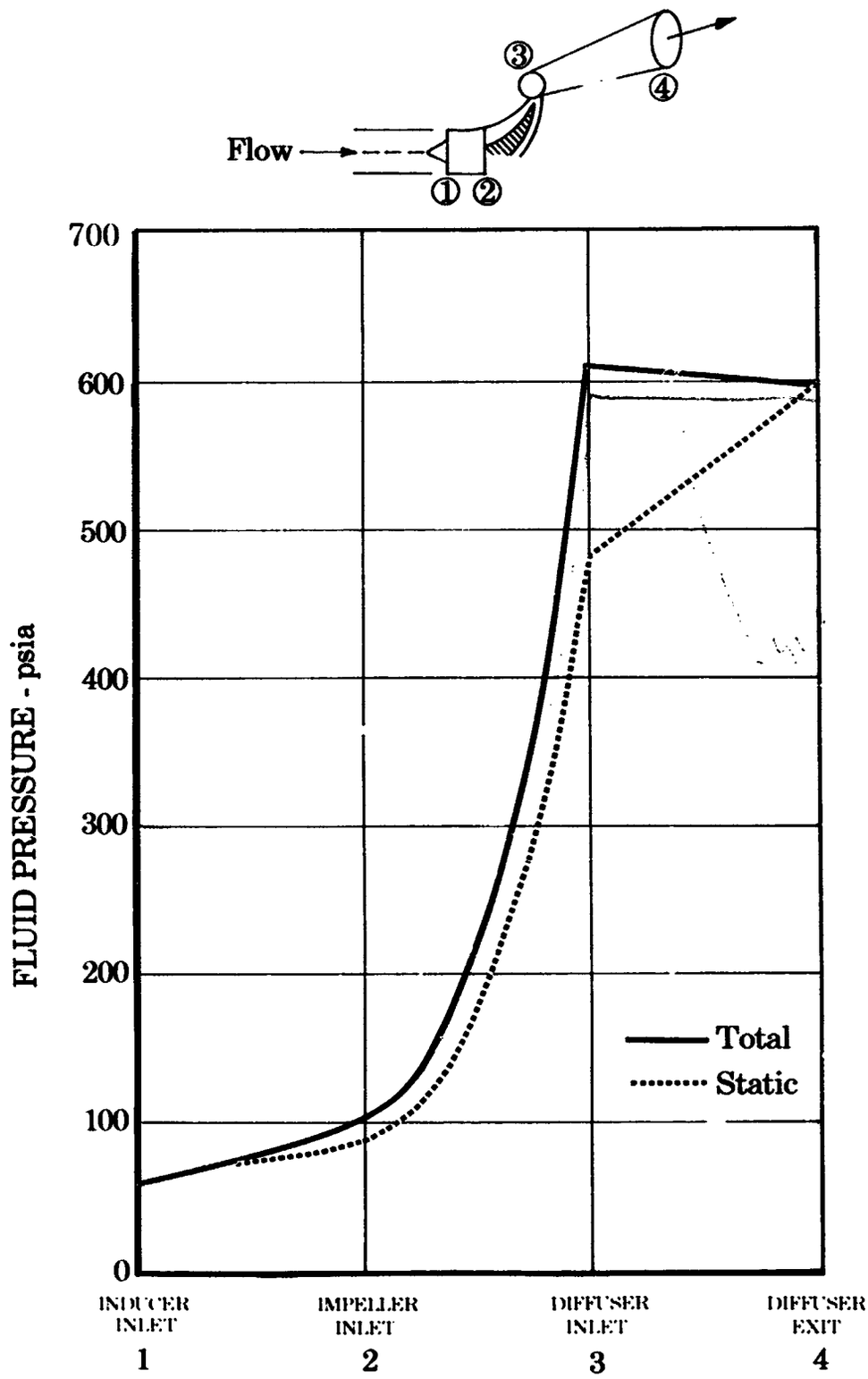

Figure B-4 RL10A3-3 Oxidizer Pump Predicted Pressure at 12,100 rpm

FD 15027

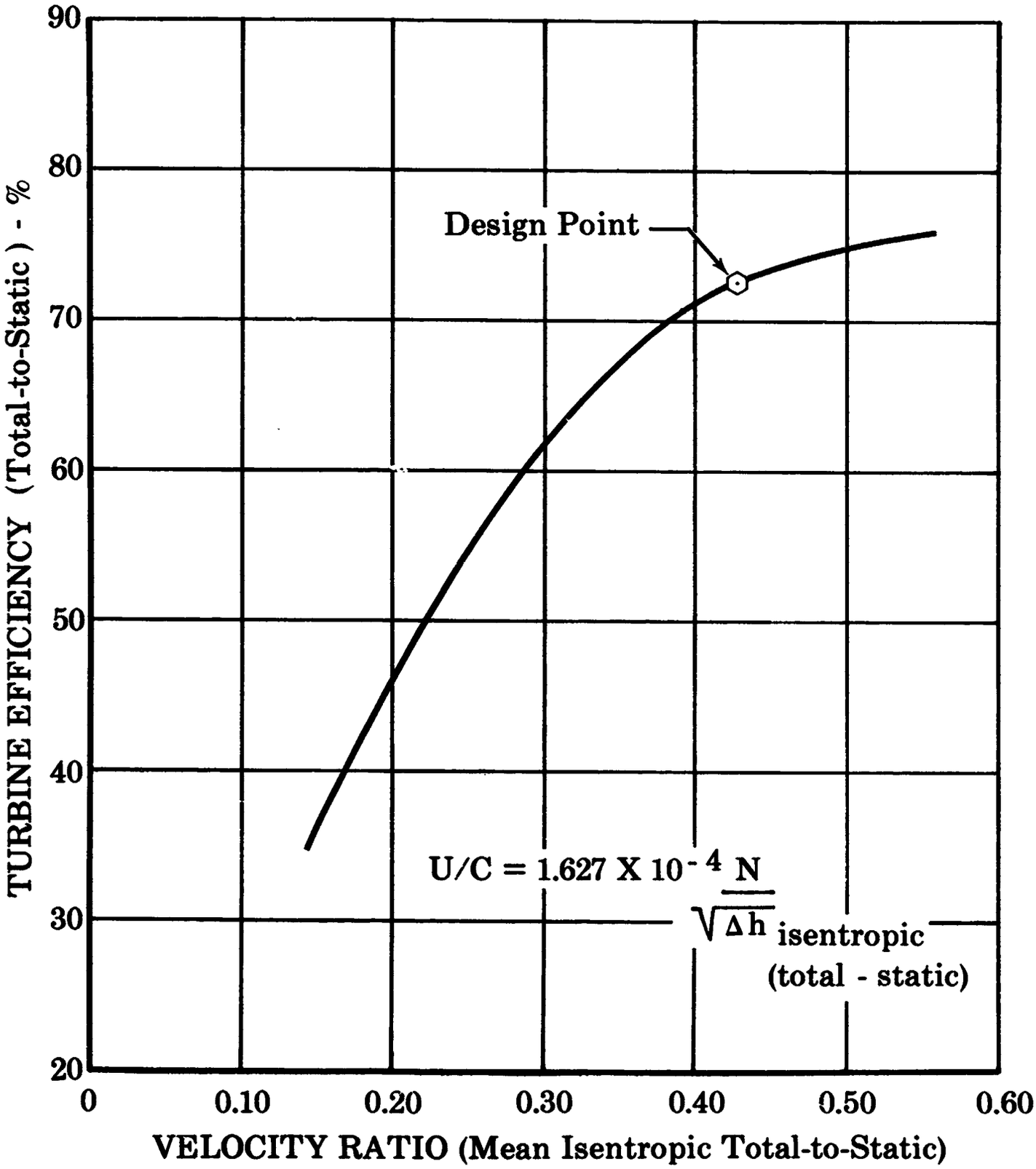

Figure B-5. RL10A-3-3 Predicted Turbine Efficiency FD 10799

APPENDIX C
RL10A-3-3 THRUST CONTROL ANALYSIS

The basic control block diagram for the engine is shown in figure C-1.

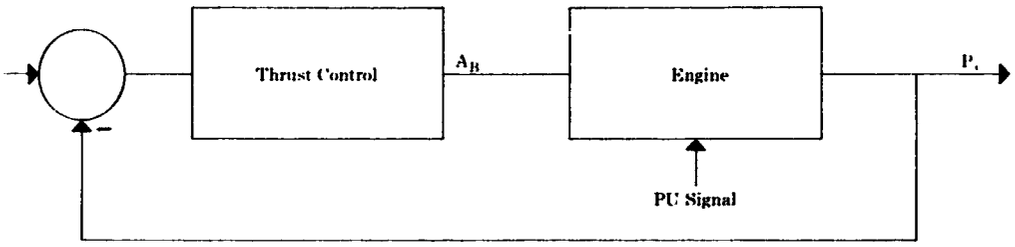

Figure C-1. Control System Simplified Block Diagram FD 3157A

The block diagram shows that the controller must regulate the chamber pressure of the engine to some referenced value for various propellant utilization input signals. These utilization signals, which change engine mixture ratio, cause the engine to operate at different power levels. Therefore, depending on the gain of the control, various amounts of droop in engine thrust will occur with changing mixture ratio.

To clarify the stability problems peculiar to this system, the linearized control block diagrams of the engine and the control are shown in figures C-2 and C-3, respectively. Investigation of these figures reveals that engine response is primarily determined by the polar moment of inertia of the turbopump rotating parts and the physical volumes of the fuel side. The control response is determined by the time constant of the servochamber and the natural frequencies of the spring-mass assemblies.

In addition to the major control loop, a secondary loop exists. This loop, which has become known as the "fast" loop, or more accurately the "negative phase lead" loop, consists of the thrust control, the engine main forward feed line, and all feedbacks to summing junctions on this line. The "fast" loop portion of the engine block diagram is enclosed by the dashed line in figure C-2.

Isolating this loop from the total system -- and assuming oxidizer, venturi, and turbine flow to be constant -- a new block diagram, as shown in figure C-4, can be drawn. If only small variations in bypass area are considered, the above assumptions are valid. Neglecting thrust control dynamics, the transfer function for the "fast" loop, $P_C/P_{CR} = K\tau_1 S/(1 + \tau_2 S)(1 + \tau_1 S)$, can be derived which gives an increasing gain and decreasing phase angle with increasing frequency, as shown by the Bode diagram in figure C-5.

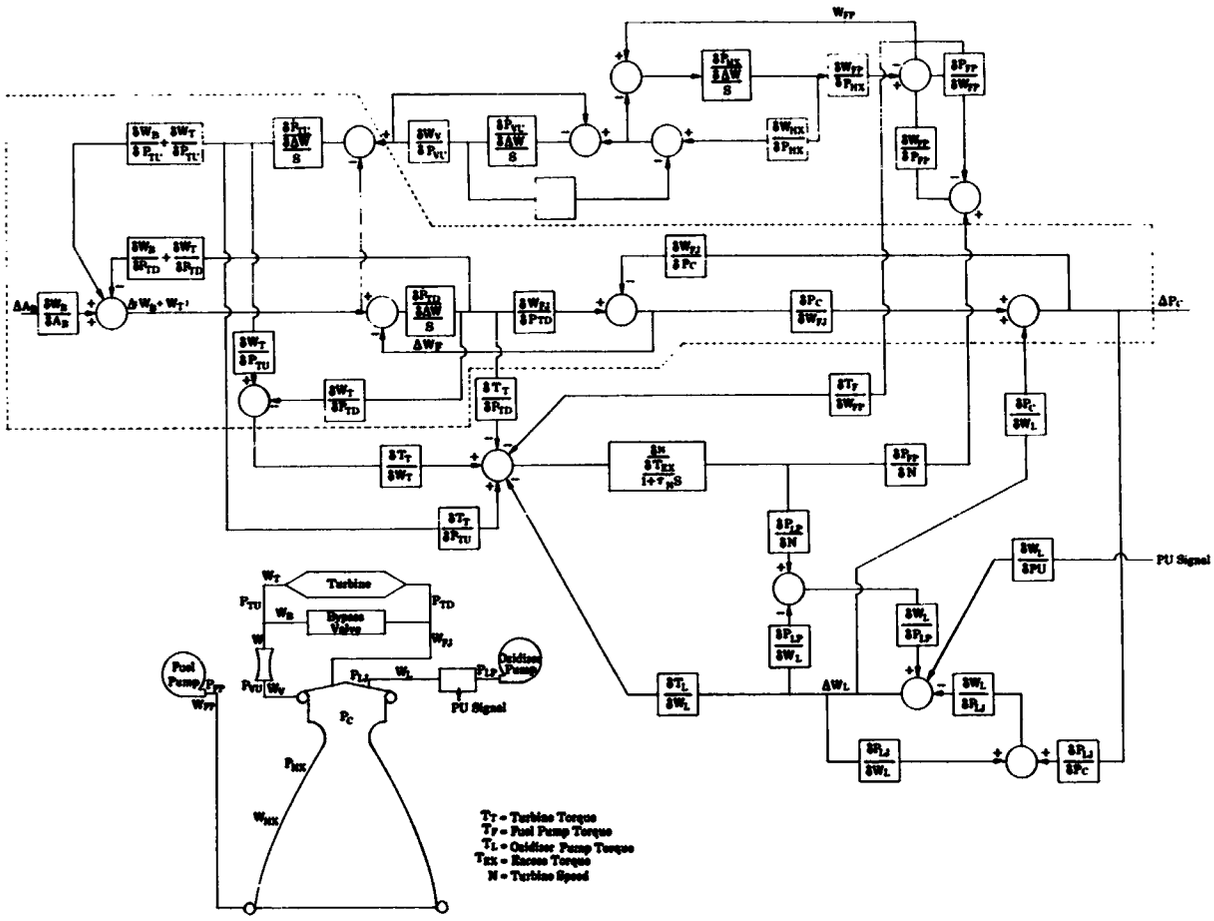

Figure C-2. Linearized Block Diagram of Engine FD 10914

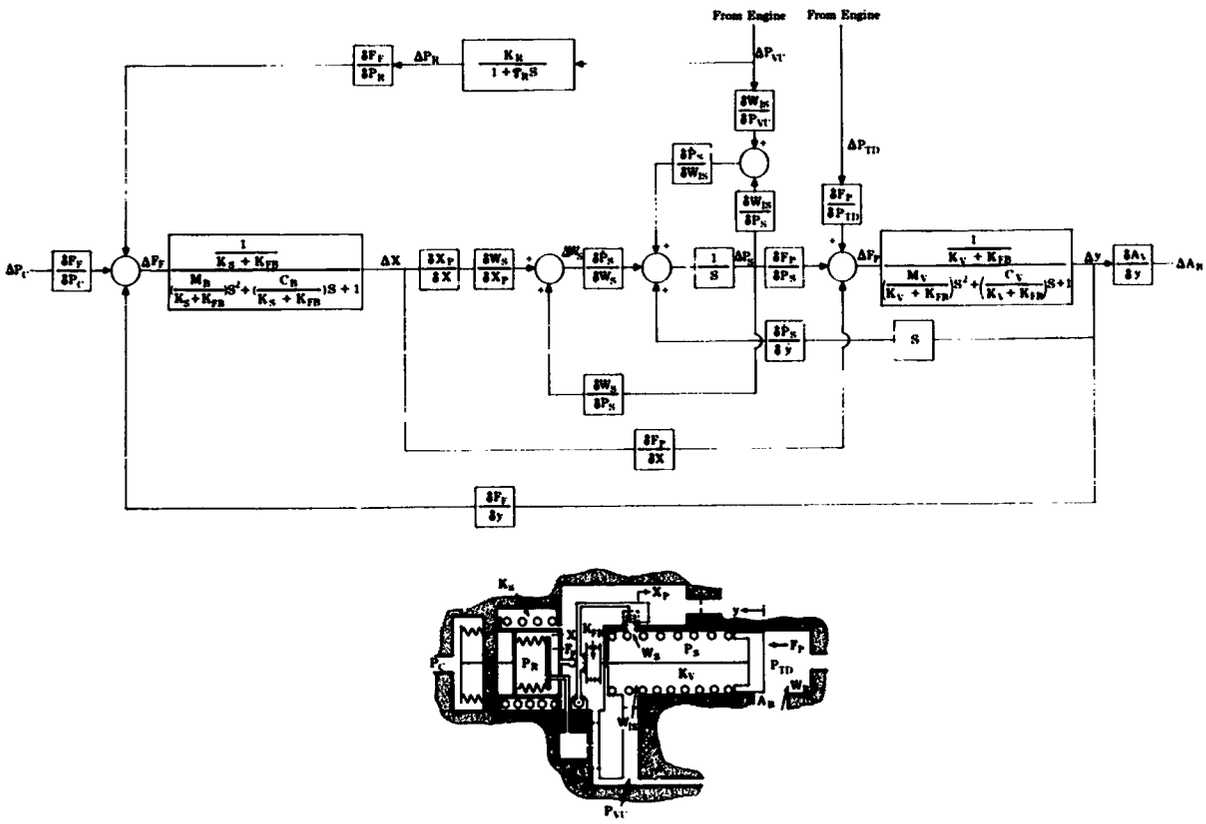

Figure C-3. Linearized Block Diagram of Thrust Control FD 10913

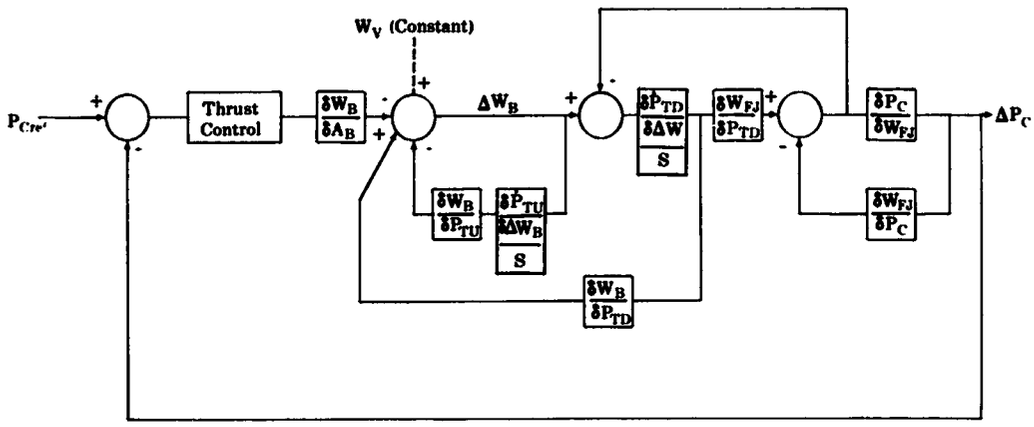

Figure C-4. Fast Loop Isolated from Engine FD 3144A

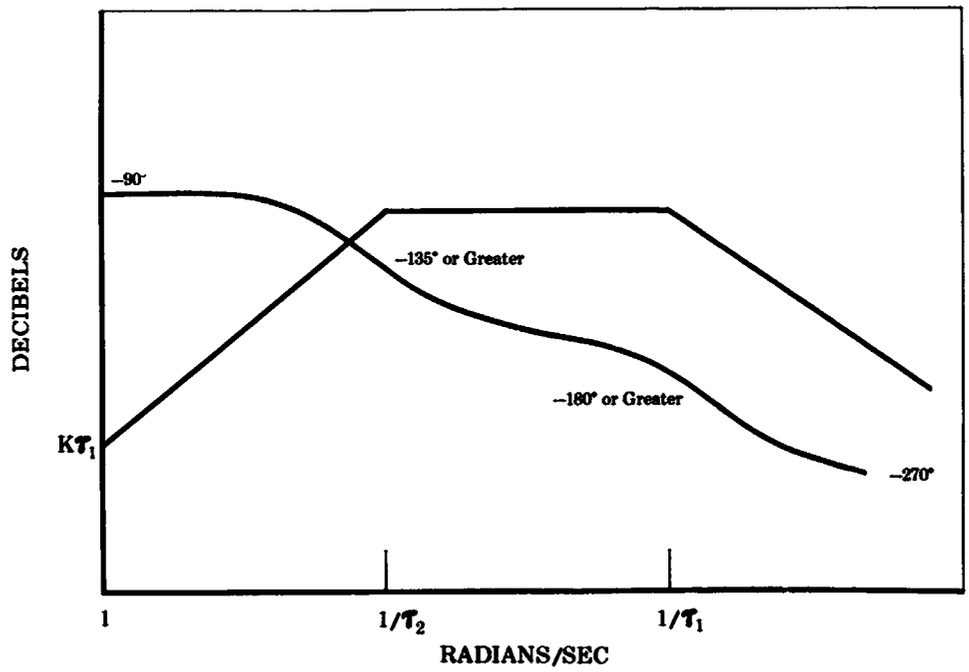

Figure C-5. Typical Bode Diagram for Fast Loop FD 3158A

Because this characteristic in the overall engine, plus control system, is undesirable, the effect must be minimized. To do this, several possibilities exist; the most obvious possibility involves a decrease in the gain (K) of the system.

In figure C-4, it can be seen that K is primarily a function of the two engine partials, $\partial W_B/\partial A_B$ and $\partial P_C/\partial W_{FJ}$, and the gain of the thrust control. The value of the two partial derivatives cannot be changed without affecting engine performance. Thrust control gain can be reduced and improve the stability of the "fast" loop. However, control gain could only be reduced to the point where control accuracy is not adversely affected.

In addition to K, the loop gain could be decreased by decreasing τ_1. This factor is a function of the turbine inlet volume, turbine area, pressure ratio across the turbine, and turbine inlet temperature. It is obvious that of the above, only the turbine inlet volume can be changed, because a change in any other parameter would affect the overall engine performance. Consequently, turbine inlet volume has been reduced to its smallest possible value.

Another method of reducing the gain of this loop would be to increase τ_2, which would decrease the frequency at which the first corner occurs, thereby reducing the maximum amplitude of the loop. (See figure C-5.) This would involve increasing the volume downstream of the turbine. In addition to the time constant and gain changes mentioned above, compensating networks could be added to the feedback path. Physically, this feedback path is the chamber pressure sensing line, and the response characteristics of it could be represented by a first order lag. Increasing the time contant of τ_3 will decrease the gain of the system; however, it will also produce additional phase lag.

Studies show changes to τ_2 and τ_3 that are possible without adversely affecting the engine's transient performance will not significantly reduce the gain of the fast loop.

With the effect of this "fast" loop minimized by the reduction of τ_1 and the controller gain, the engine is stable. This is shown by the Bode plot in figure C-6 and the Nyquist diagram in figure C-7. These curves indicate a gain margin of 12 db and a phase margin of 128 degrees.

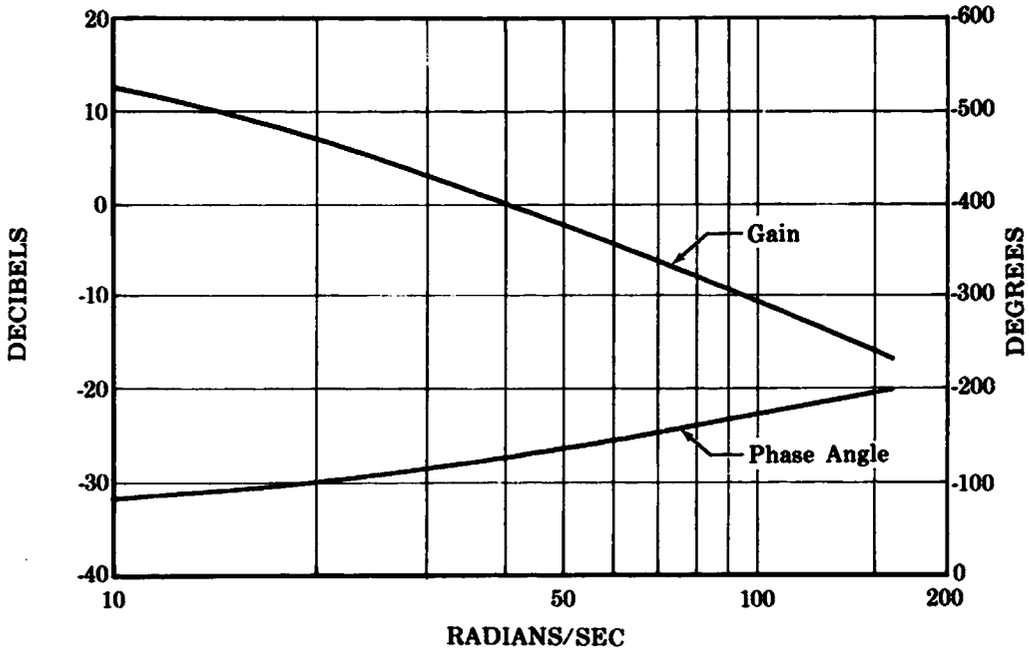

Figure C-6. Open Loop Response of Engine Plus Control (Bode Diagram) FD 10953

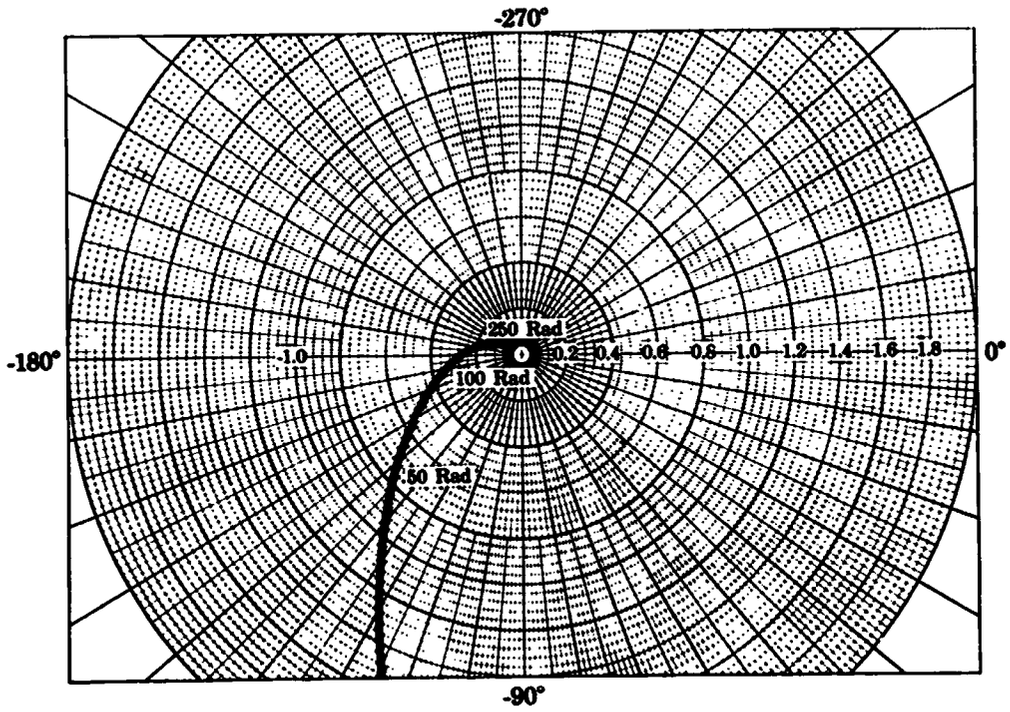

Figure C-7. Open Loop Response of Engine Plus Control (Nyquist Diagram) FD 10955

APPENDIX D
COMBUSTION AND FLOW DATA

The following curves on combustion and flow data are included in this appendix:

Figure D-1. Predicted Torque vs Percent Design Chamber Pressure

Figure D-2. Estimated Effect of Mixture Ratio on Thrust and Specific Impulse

Figure D-3. Calculated Thrust Chamber Tube Temperature and Pressure

Figure D-4. Temperature vs Flow Through Injector Face.

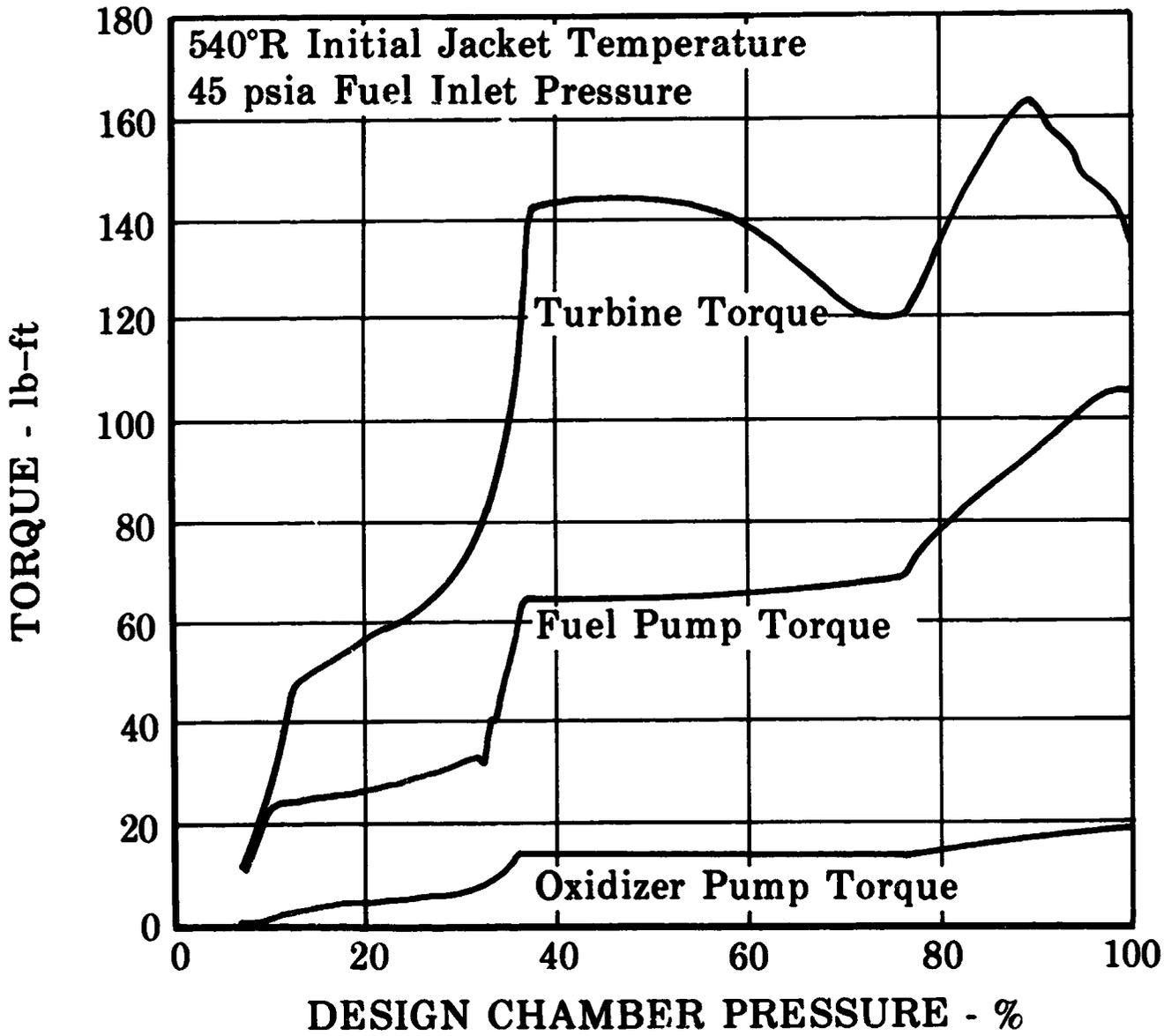

Figure D-1. Predicted Torque vs Percent Design Chamber Pressure FD 15030

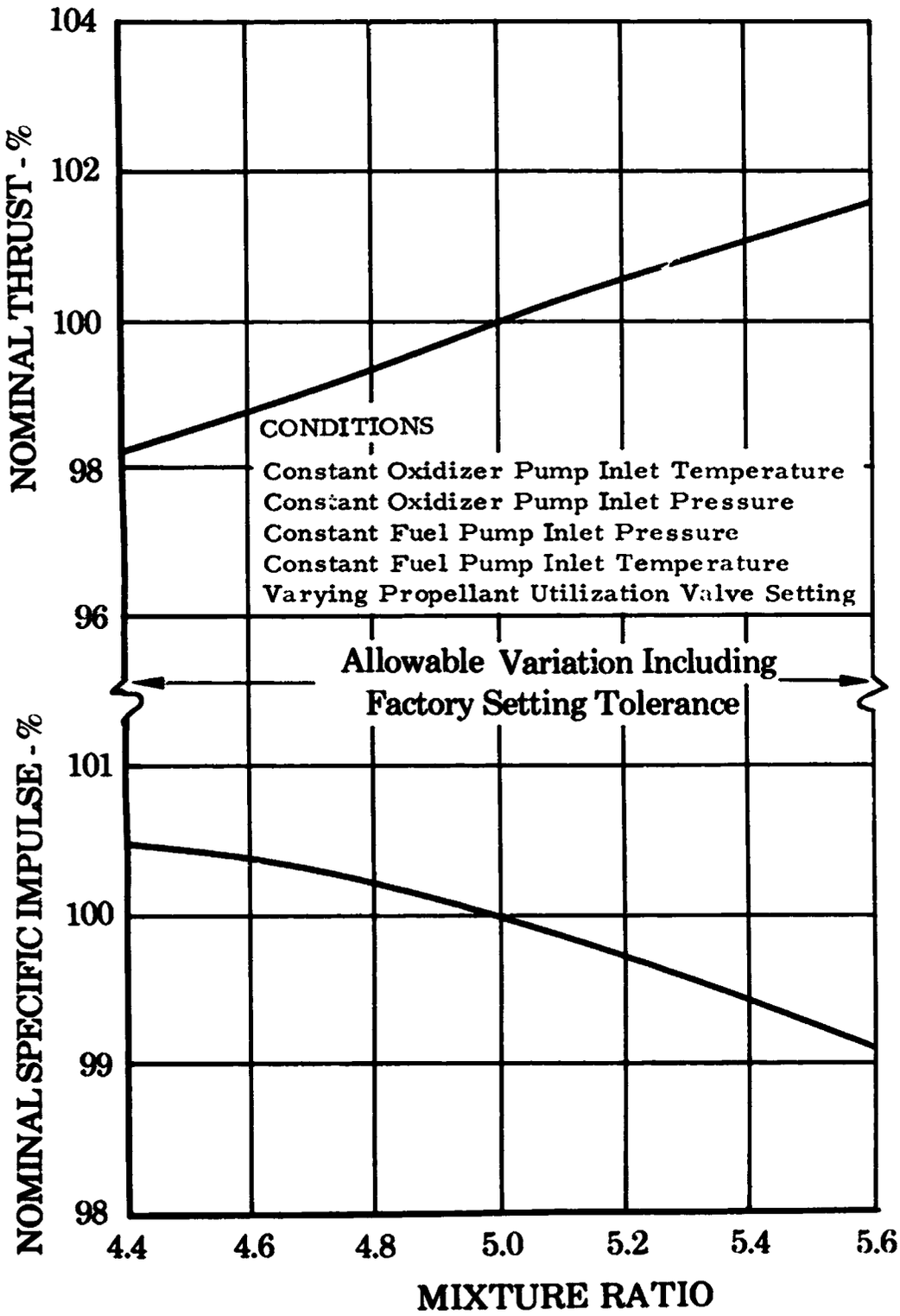

Figure D-2. Estimated Effect of Mixture Ratio on Thrust and Specific Impulse FD 10798A

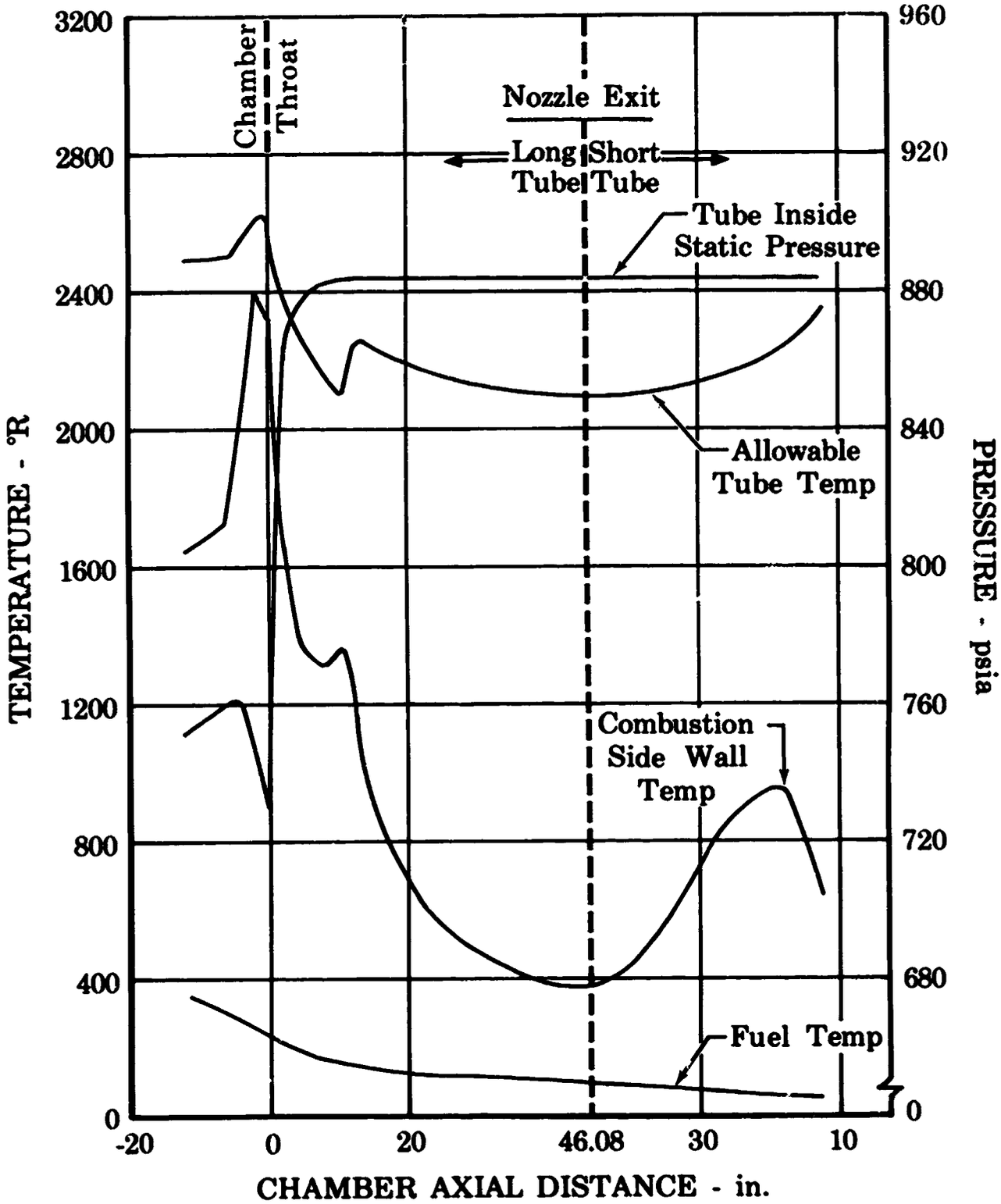

Figure D-3. Calculated Thrust Chamber Tube Temperature and Pressure FD 15028

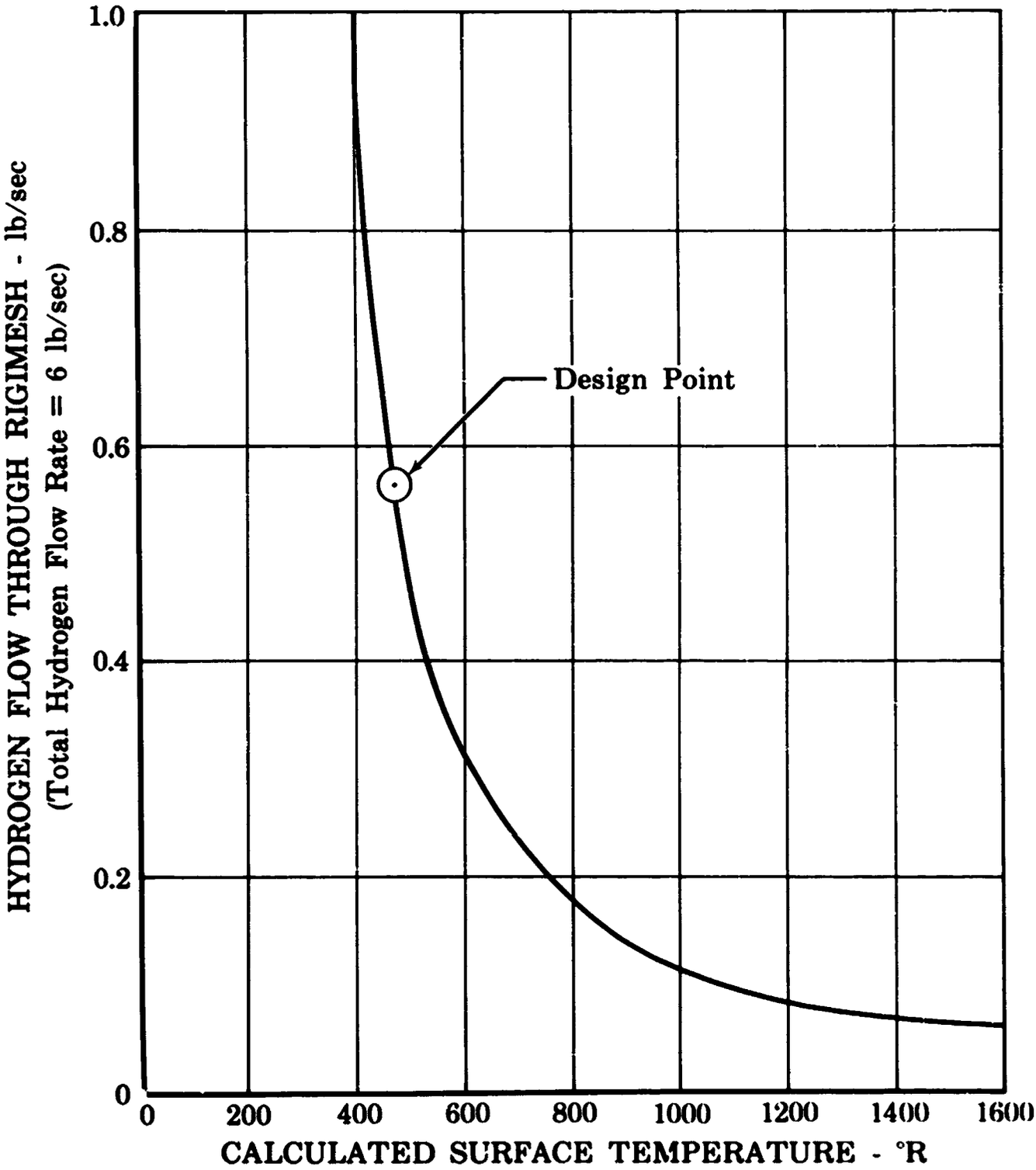

Figure D-4. Temperature vs Flow Through Injector Face FD 15046

APPENDIX E
INLET VALVE SPECIFICATIONS

Table E-1. Oxidizer Inlet Valve Specifications

1. Oxidizer Side	
Rated pressure, psia	26 to 130
Proof pressure, psig	195
Fluid temperature, °R	165 to 177
Rated flow, lb/sec	28.2
Pressure drop	Equivalent line size x 1.5
Burst pressure, psig	260
2. Actuation Medium (Helium Gas)	
Elapsed time - open to closed, ms	158 nominal
Elapsed time - closed to open, ms	17 nominal
Actuation pressure, psia	470 ± 30
Actuation proof pressure, psig	750
Helium temperature, °F	-320 to + 160
Burst pressure, psig	1000 minimum
3. Ambient Conditions	
Temperature, °F	-320 to + 160
Pressure, psia	0 to 15
4. Durability (closed-to-open-to-closed), cycles	1500 minimum

Table E-2. Fuel Inlet Valve Specifications

1. Fuel Side	
Rated pressure, psia	18 to 45
Proof pressure, psig	70
Fluid temperature, °R	37 to 45
Rated flow, lb/sec	5.6
Pressure drop	Equivalent line size x 1.5
Burst pressure, psig	90
2. Actuation Medium (Helium Gas)	
Elapsed time - open to closed, ms	389 nominal
Elapsed time - closed to open, ms	30 nominal
Actuation pressure, psia	470 ± 30
Actuation proof pressure, psig	750
Helium temperature, °F	-320 to + 160
Burst pressure, psig	1000 minimum
3. Ambient Conditions	
Temperature, °F	-320 to +160
Pressure, psia	0 to 15
4. Durability (closed-to-open-to-closed), cycles	1500 minimum